US 20200260420A1

(19) **United States**

(12) **Patent Application Publication** (10) **Pub. No.: US 2020/0260420 A1**

Bala et al. (43) **Pub. Date: Aug. 13, 2020**

(54) **PHYSICAL (PHY) LAYER SOLUTIONS TO SUPPORT USE OF MIXED NUMEROLOGIES IN THE SAME CHANNEL**

(71) Applicant: **IDAC HOLDINGS, INC.**, Wilmington, DE (US)

(72) Inventors: **Erdem Bala**, East Meadow, NY (US); **Afshin Haghighat**, Ile-Bizard (CA); **Mihaela C. Beluri**, Jericho, NY (US); **Rui Yang**, Greenlawn, NY (US); **Ananth Kini**, East Norriton, PA (US); **Janet A. Stern-Berkowitz**, Little Neck, NY (US); **Alphan Sahin**, Westbury, NY (US)

(73) Assignee: **IDAC HOLDINGS, INC.**, Wilmington, DE (US)

(21) Appl. No.: **16/859,479**

(22) Filed: **Apr. 27, 2020**

Related U.S. Application Data

(63) Continuation of application No. 16/300,336, filed on Nov. 9, 2018, now Pat. No. 10,638,473, filed as application No. PCT/US2017/032222 on May 11, 2017.

(60) Provisional application No. 62/334,882, filed on May 11, 2016.

Publication Classification

(51) **Int. Cl.**

H04W 72/04	(2006.01)
H04W 72/08	(2006.01)
H04L 27/00	(2006.01)
H04L 1/18	(2006.01)

(52) **U.S. Cl.**

CPC ***H04W 72/042*** (2013.01); ***H04W 72/082*** (2013.01); *H04W 52/262* (2013.01); ***H04L 27/0008*** (2013.01); ***H04L 1/1893*** (2013.01); ***H04W 72/048*** (2013.01)

(57) **ABSTRACT**

A wireless transmit/receive unit (WTRU) may, in a first codeword, map a first set of bits to a higher order modulation scheme and a second set of bits to a lower order scheme. The WTRU may then transmit the first set of bits in the first codeword at a first allocated power and the second set of bits in the first codeword at a second allocated power. In an example, the second allocated power may be great than the first allocated power. Further, the WTRU may determine the second allocated power based on power boosting the first allocated power. In another example, the WTRU may receive an assignment message from a base station including instructions regarding partition determination and resource assignment. The WTRU may then determine at least two partitions of bandwidth based on the assignment message. Further, each partition may have differing symbol periods, differing subcarrier spacing or both.

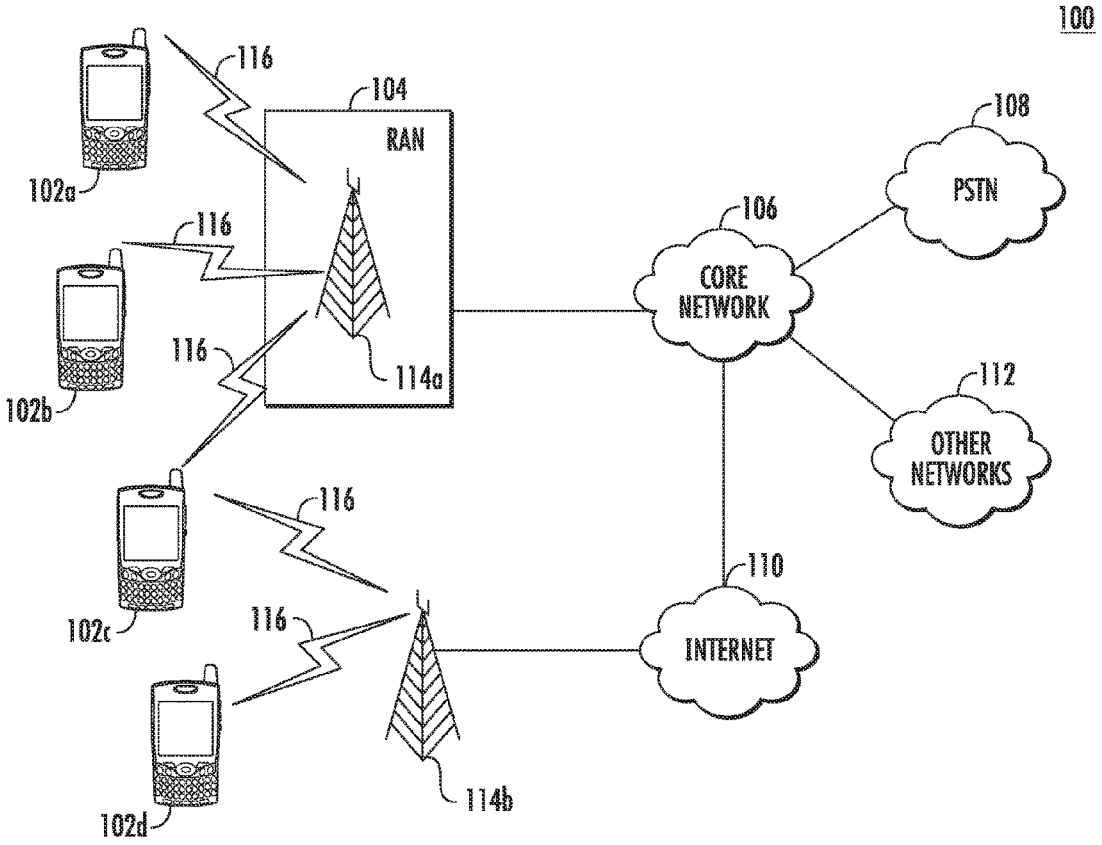

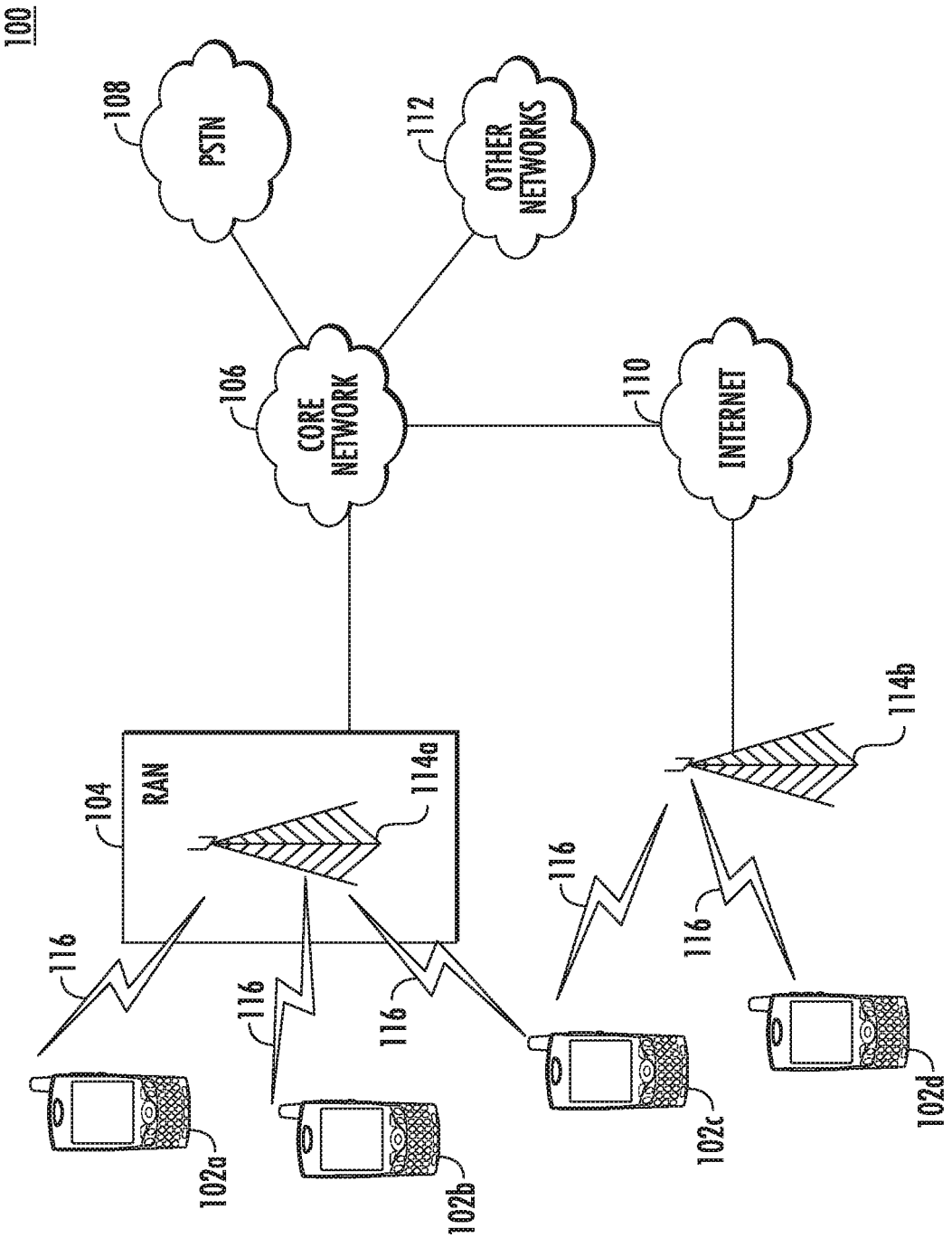
100
108
PSTN
112
OTHER NETWORKS
106
CORE NETWORK
110
INTERNET
104
RAN
114a
114b
116
116
116
116
116
102a
102b
102c
102d

FIG. 1A

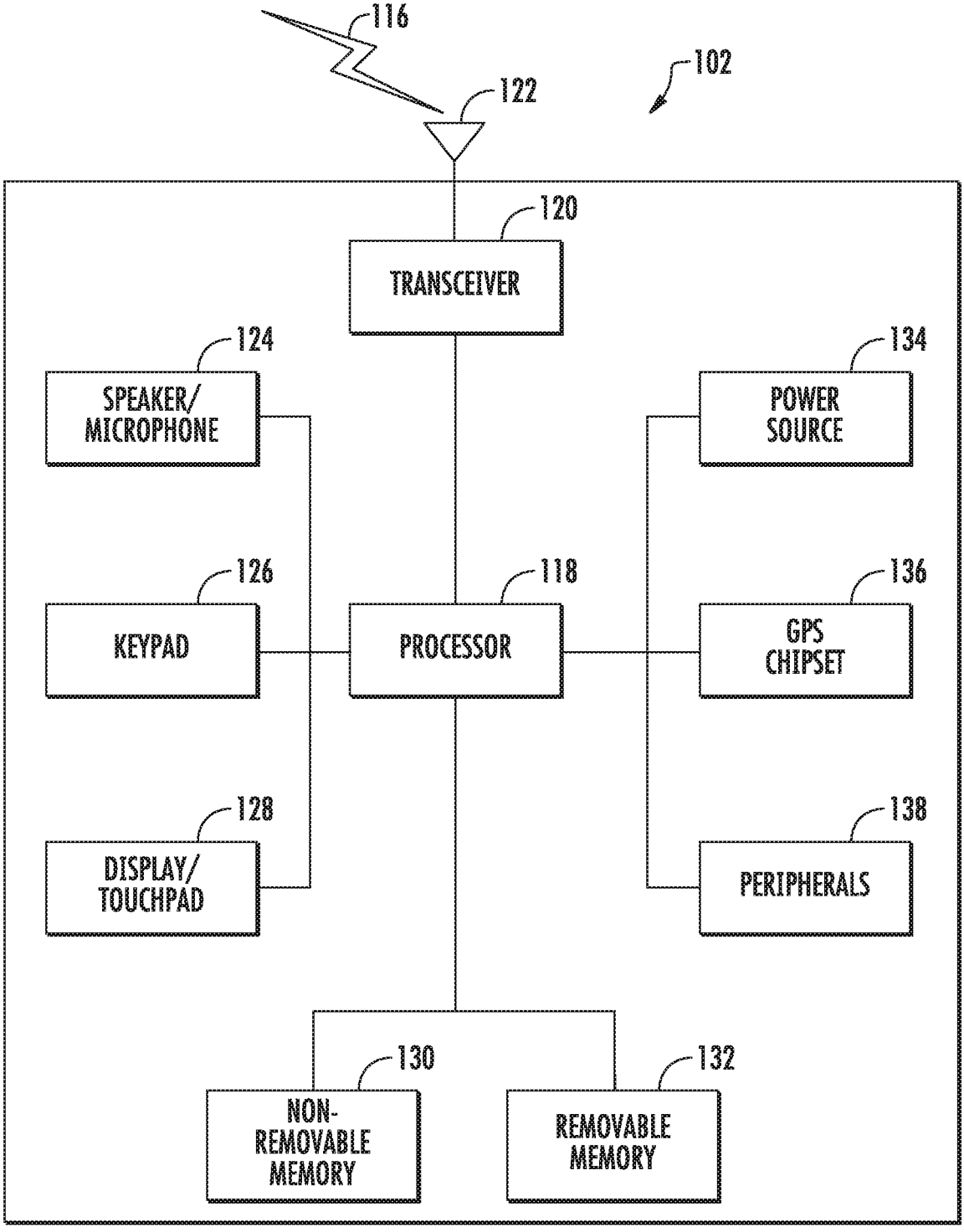
116
122
102
120
TRANSCEIVER
124
SPEAKER/
MICROPHONE
134
POWER
SOURCE
126
KEYPAD
118
PROCESSOR
136
GPS
CHIPSET
128
DISPLAY/
TOUCHPAD
138
PERIPHERALS
130
NON-
REMOVABLE
MEMORY
132
REMOVABLE
MEMORY

FIG. 1B

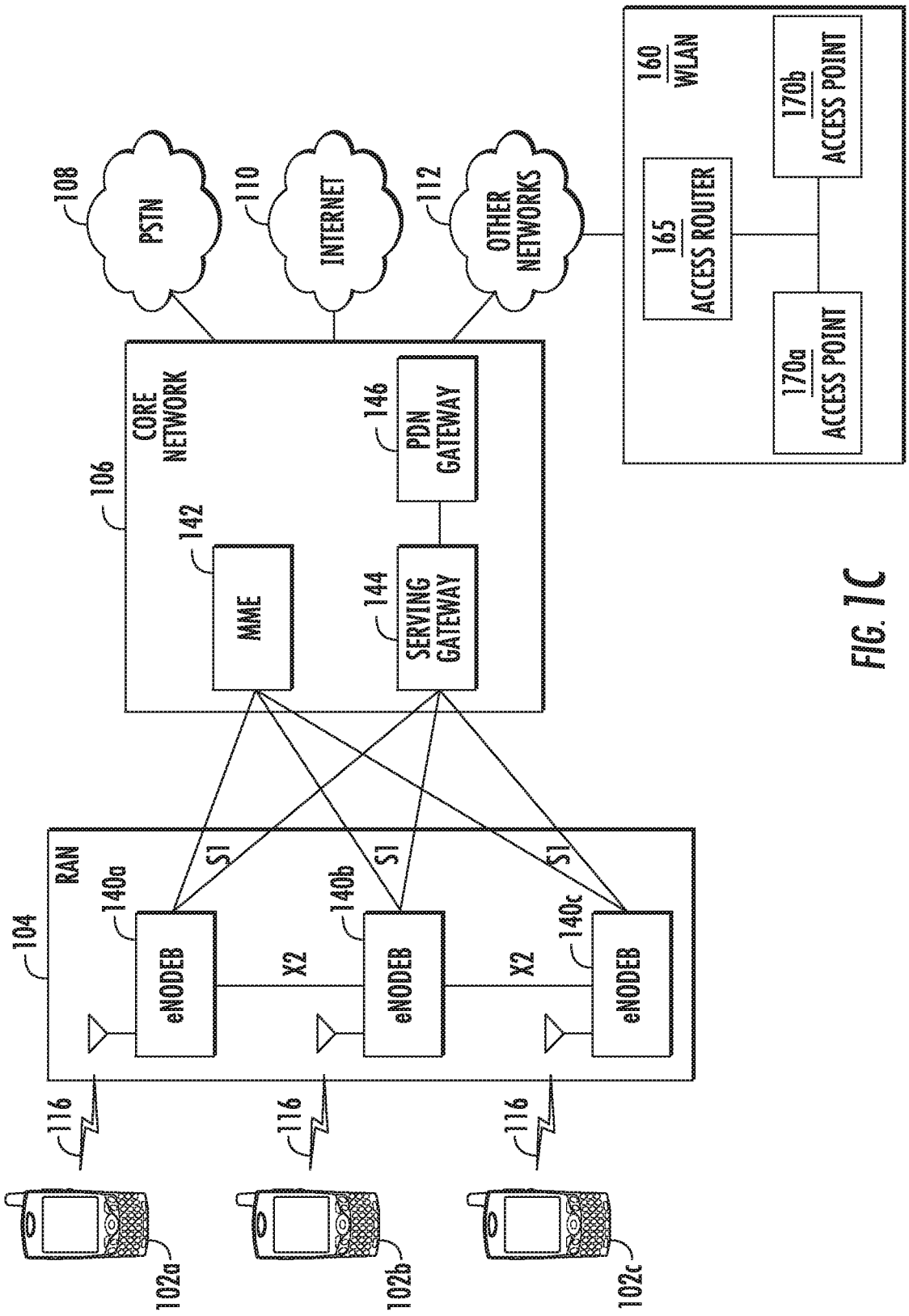
102a
102b
102c
116
116
116
104
RAN
140a
140b
140c
eNODEB
eNODEB
eNODEB
X2
X2
S1
S1
S1
106
CORE NETWORK
142
MME
144
SERVING GATEWAY
146
PDN GATEWAY
108
PSTN
110
INTERNET
112
OTHER NETWORKS
160
WLAN
165
ACCESS ROUTER
170a
ACCESS POINT
170b
ACCESS POINT

FIG. 1C

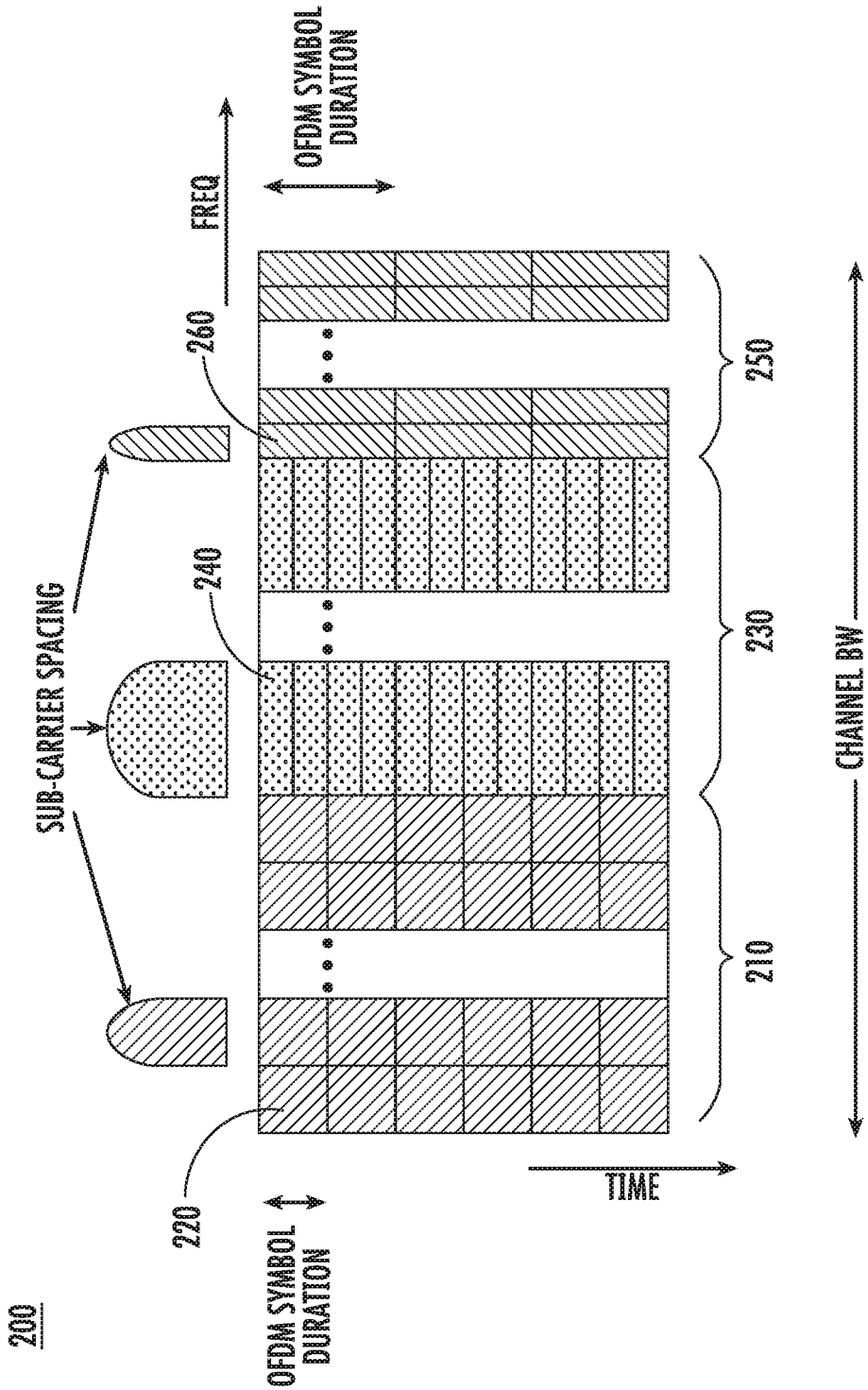
200
SUB-CARRIER SPACING
FREQ
OFDM SYMBOL DURATION
OFDM SYMBOL DURATION
260
240
220
210
230
250
TIME
CHANNEL BW

FIG. 2

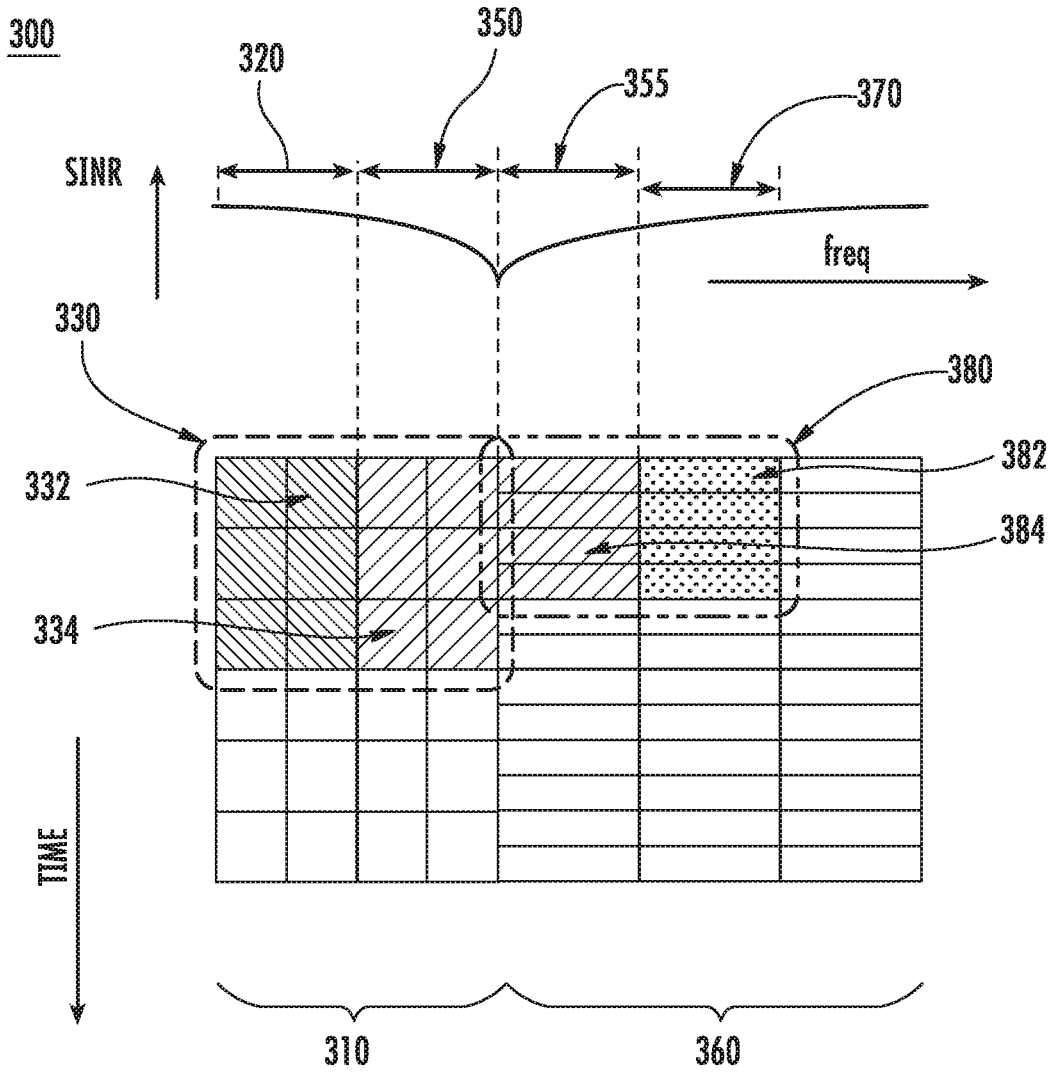
300
320
350
355
370
SINR
freq
330
380
382
332
384
334
TIME
310
360

FIG. 3

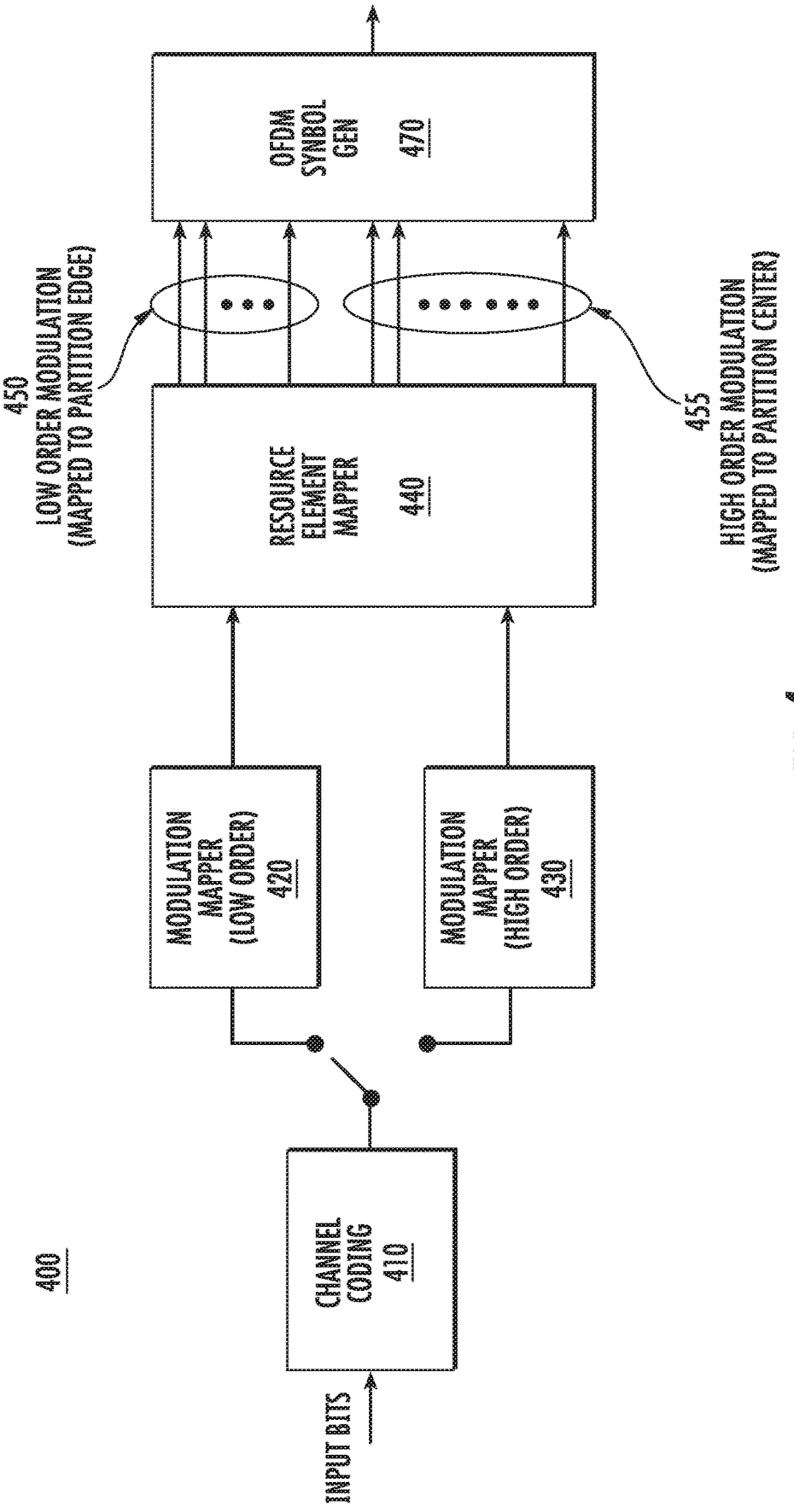
400
INPUT BITS
CHANNEL CODING 410
MODULATION MAPPER (LOW ORDER) 420
MODULATION MAPPER (HIGH ORDER) 430
RESOURCE ELEMENT MAPPER 440
450
LOW ORDER MODULATION (MAPPED TO PARTITION EDGE)
455
HIGH ORDER MODULATION (MAPPED TO PARTITION CENTER)
OFDM SYMBOL GEN 470

FIG. 4

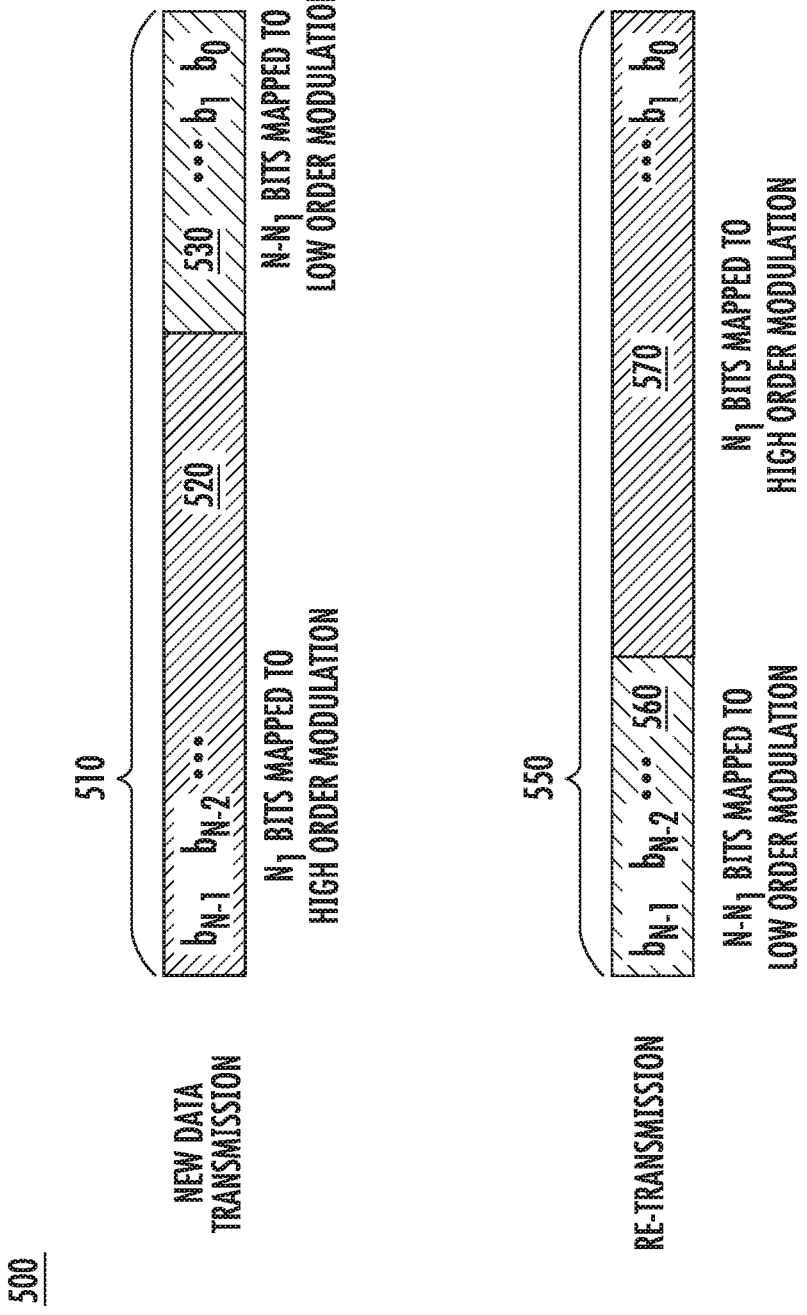
500
NEW DATA TRANSMISSION
510
b_{N-1} b_{N-2} *** 520
N_1 BITS MAPPED TO HIGH ORDER MODULATION
530 *** b_1 b_0
N-N_1 BITS MAPPED TO LOW ORDER MODULATION
RE-TRANSMISSION
550
b_{N-1} b_{N-2} *** 560
N-N_1 BITS MAPPED TO LOW ORDER MODULATION
570
N_1 BITS MAPPED TO HIGH ORDER MODULATION

FIG. 5

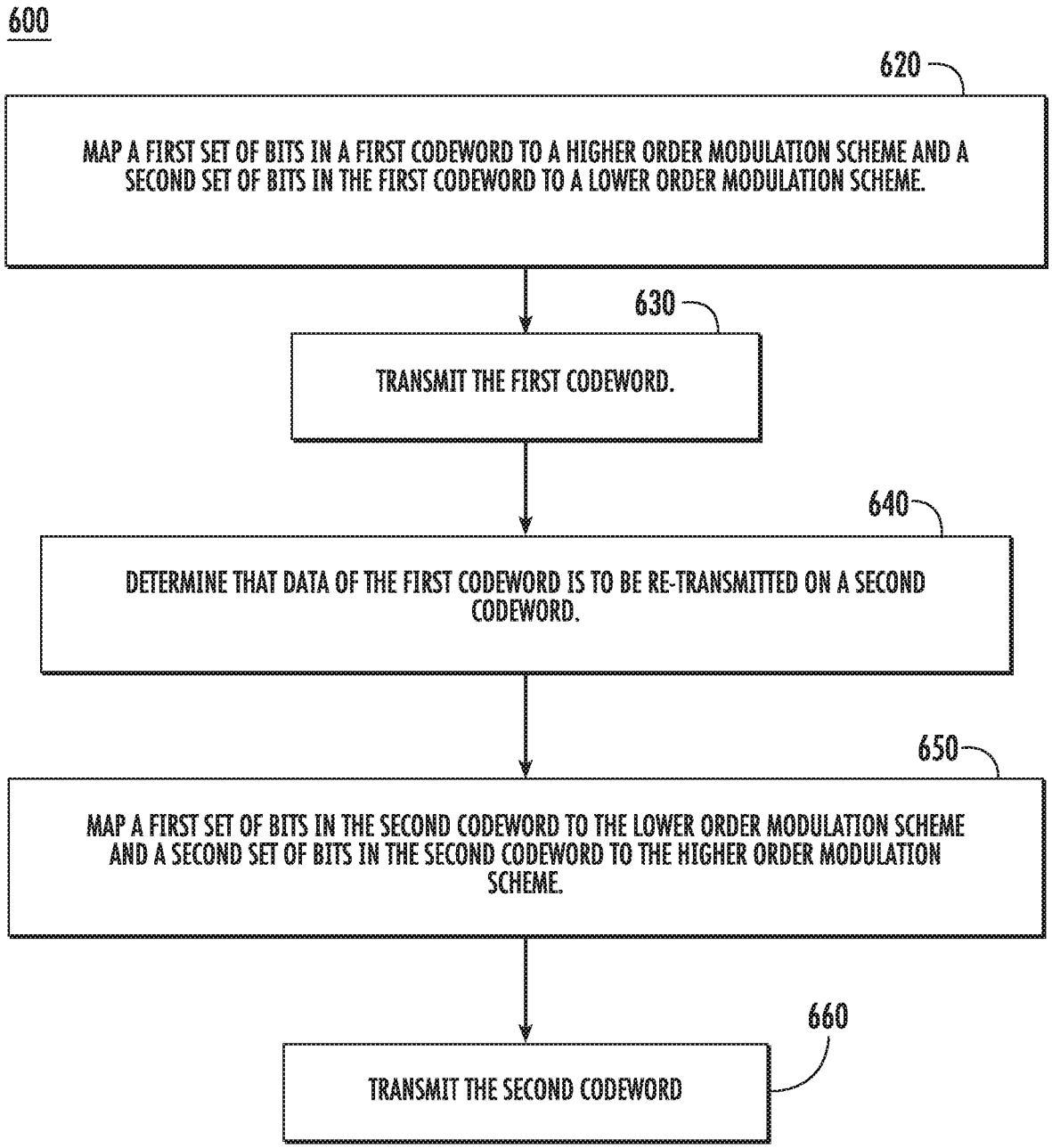
600
620
MAP A FIRST SET OF BITS IN A FIRST CODEWORD TO A HIGHER ORDER MODULATION SCHEME AND A SECOND SET OF BITS IN THE FIRST CODEWORD TO A LOWER ORDER MODULATION SCHEME.
630
TRANSMIT THE FIRST CODEWORD.
640
DETERMINE THAT DATA OF THE FIRST CODEWORD IS TO BE RE-TRANSMITTED ON A SECOND CODEWORD.
650
MAP A FIRST SET OF BITS IN THE SECOND CODEWORD TO THE LOWER ORDER MODULATION SCHEME AND A SECOND SET OF BITS IN THE SECOND CODEWORD TO THE HIGHER ORDER MODULATION SCHEME.
660
TRANSMIT THE SECOND CODEWORD

FIG. 6

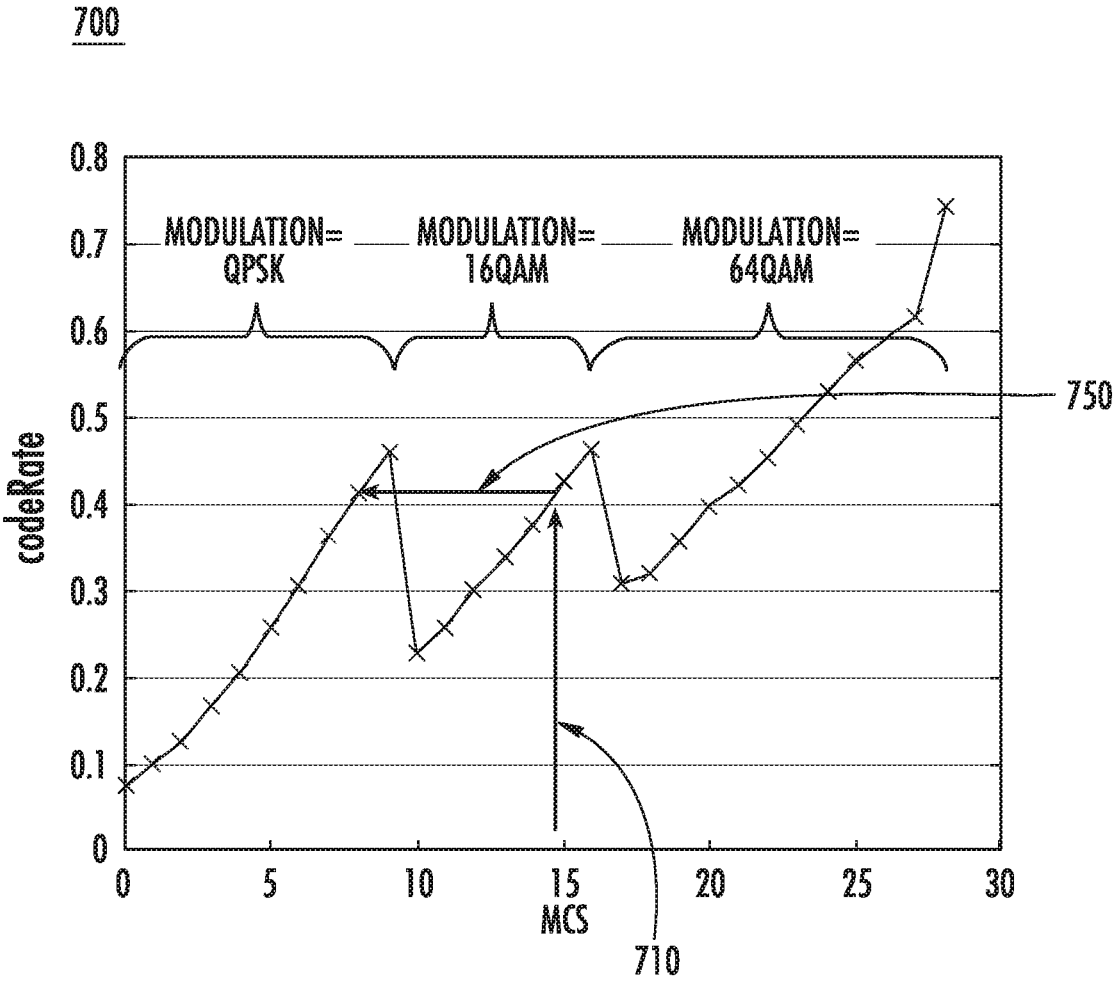
700
0.8
0.7
0.6
0.5
0.4
0.3
0.2
0.1
0
codeRate
MODULATION= QPSK
MODULATION= 16QAM
MODULATION= 64QAM
750
0
5
10
15
20
25
30
MCS
710

FIG. 7

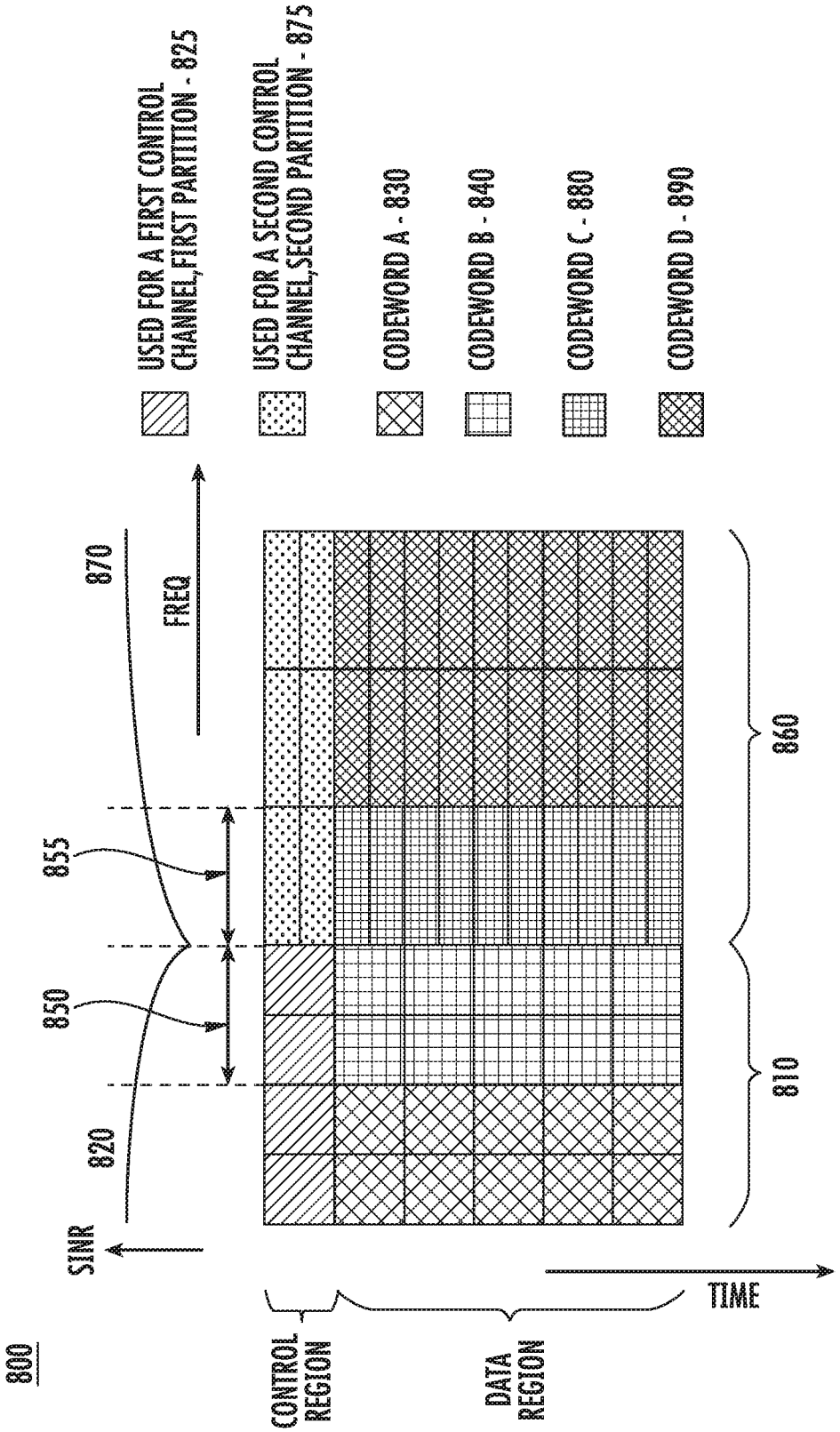
USED FOR A FIRST CONTROL CHANNEL, FIRST PARTITION - 825
USED FOR A SECOND CONTROL CHANNEL, SECOND PARTITION - 875
CODEWORD A - 830
CODEWORD B - 840
CODEWORD C - 880
CODEWORD D - 890
800
870
FREQ
855
850
820
SINR
860
810
TIME
CONTROL REGION
DATA REGION

FIG. 8

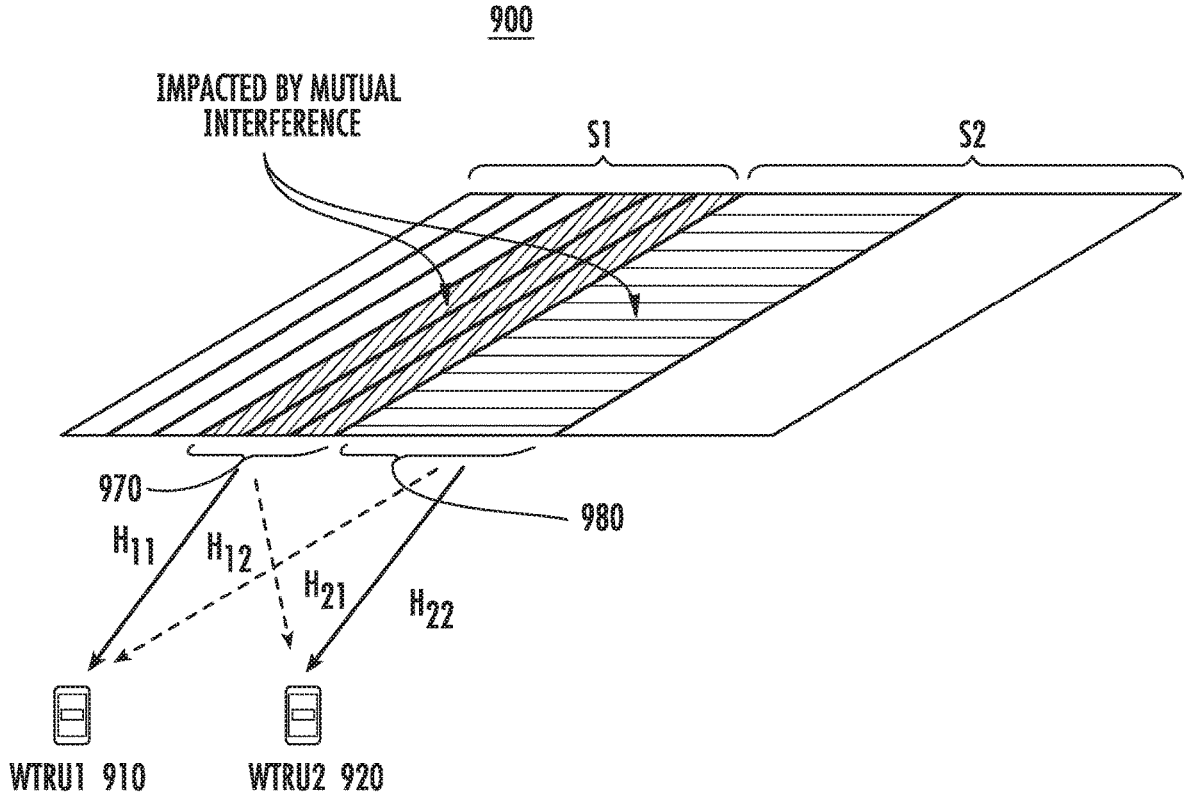
900
IMPACTED BY MUTUAL INTERFERENCE
S1
S2
970
980
H_{11}
H_{12}
H_{21}
H_{22}
WTRU1 910
WTRU2 920

FIG. 9

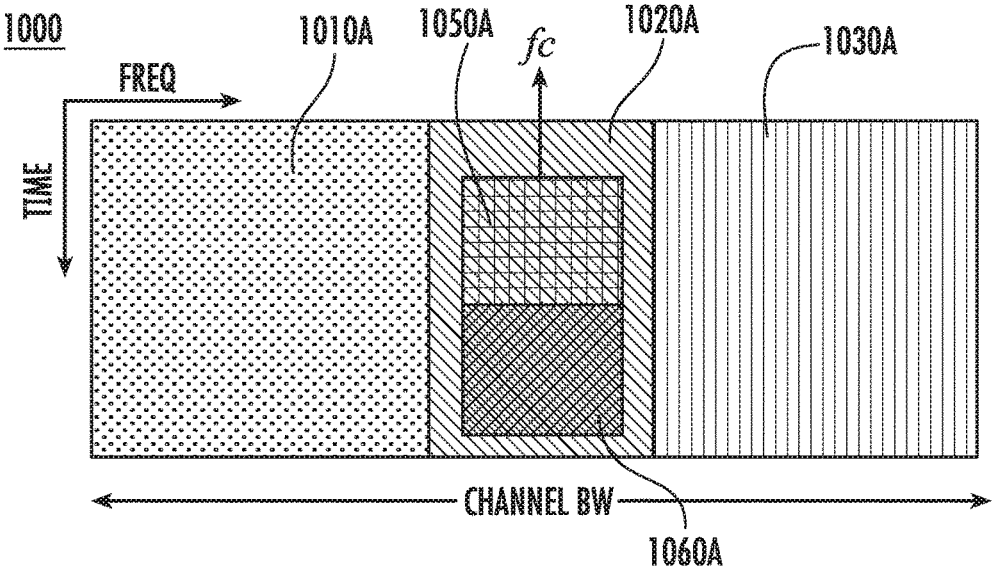

FIG. 10A

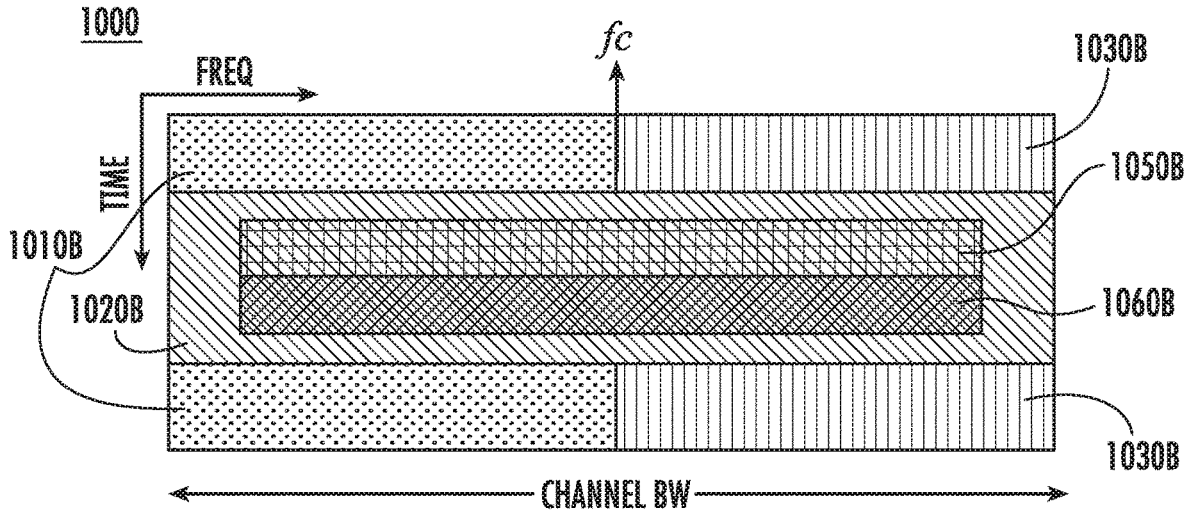

FIG. 10B

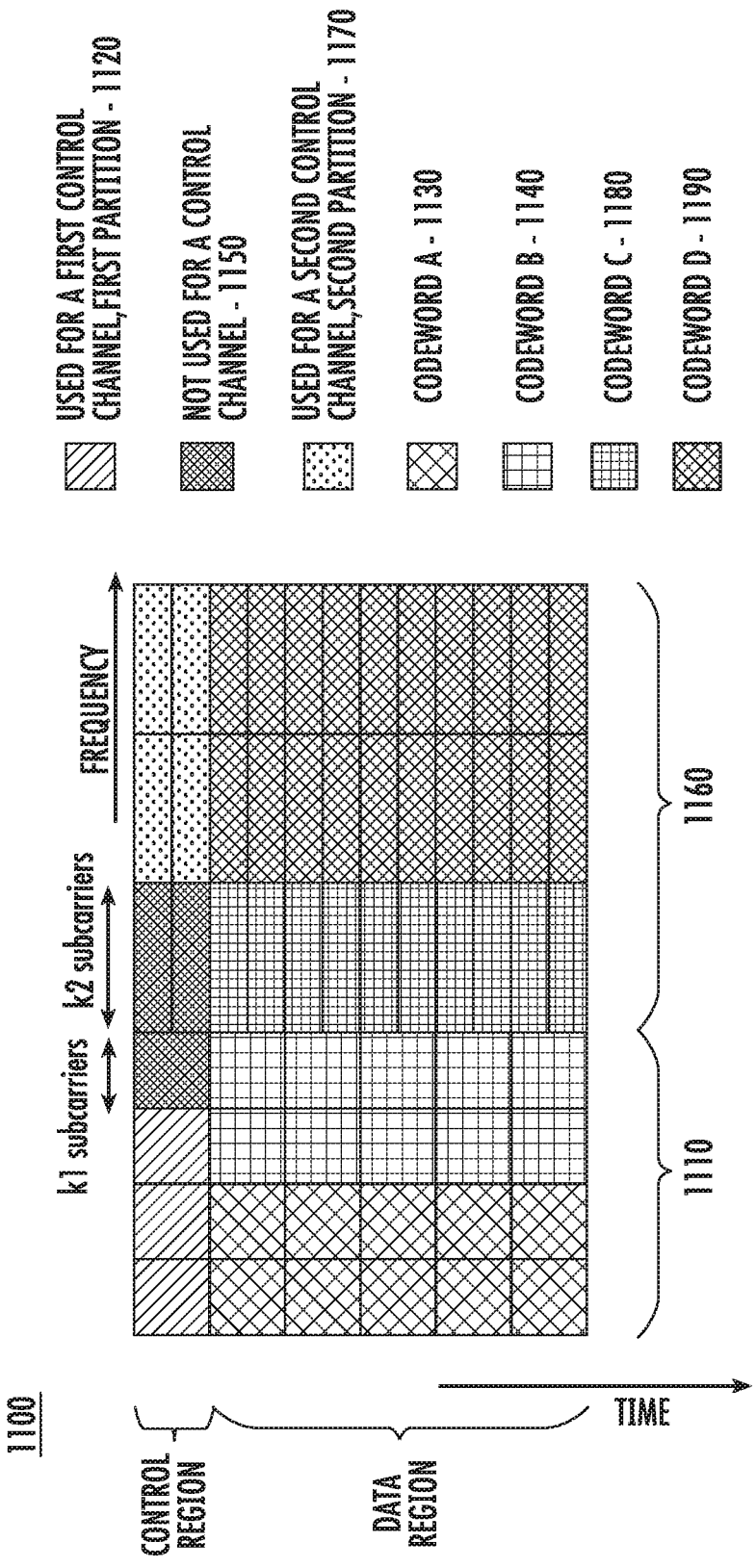
USED FOR A FIRST CONTROL CHANNEL,FIRST PARTITION - 1120
NOT USED FOR A CONTROL CHANNEL - 1150
USED FOR A SECOND CONTROL CHANNEL,SECOND PARTITION - 1170
CODEWORD A - 1130
CODEWORD B - 1140
CODEWORD C - 1180
CODEWORD D - 1190
FREQUENCY
k1 subcarriers
k2 subcarriers
1160
1110
1100
CONTROL REGION
DATA REGION
TIME

FIG. 11

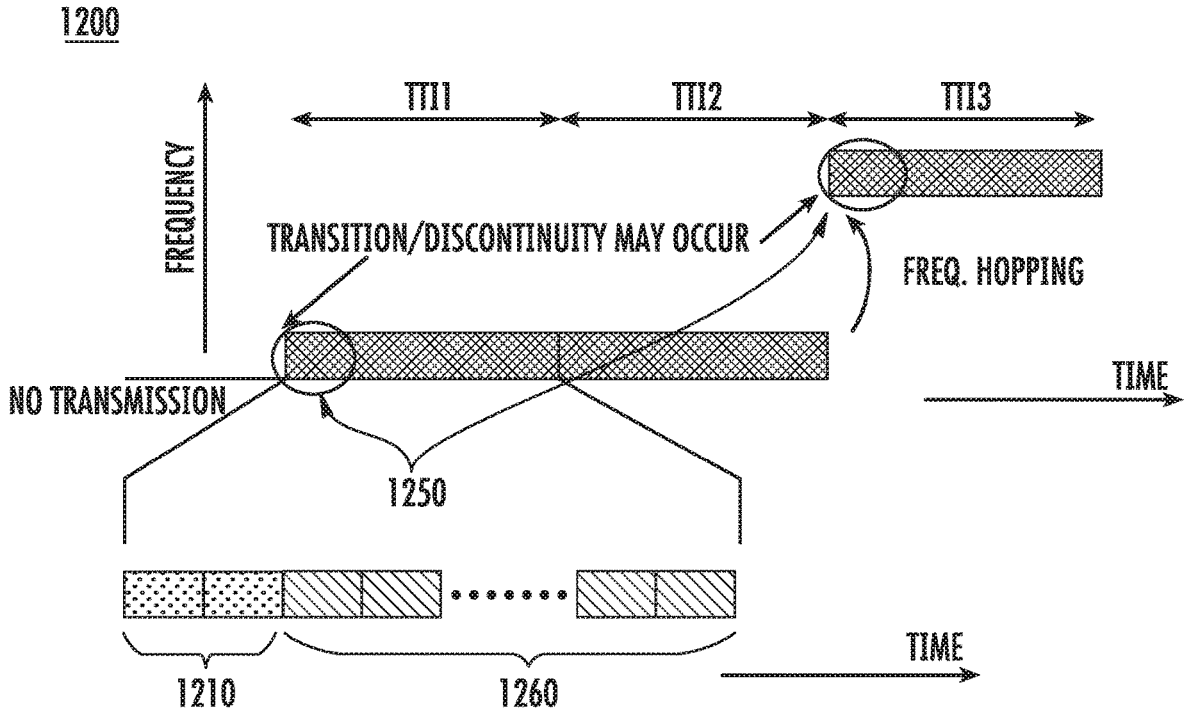
1200
TTI1
TTI2
TTI3
FREQUENCY
TRANSITION/DISCONTINUITY MAY OCCUR
FREQ. HOPPING
NO TRANSMISSION
TIME
1250
TIME
1210
1260

FIG. 12

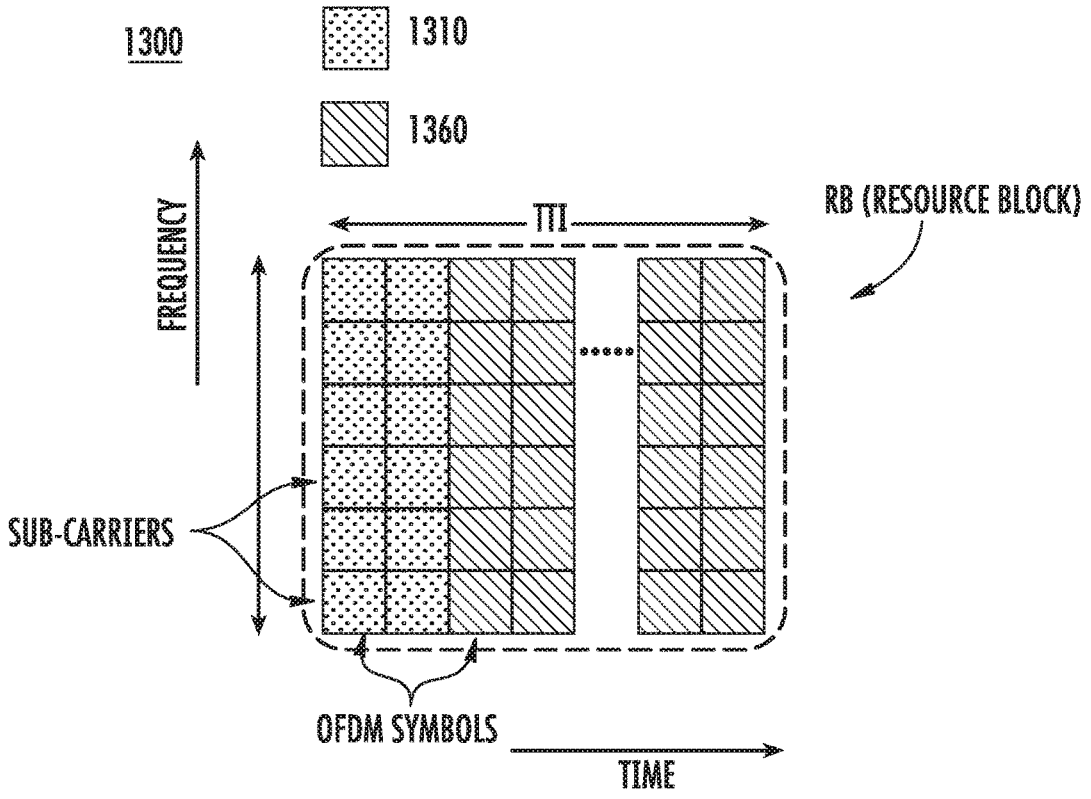
1300
1310
1360
RB (RESOURCE BLOCK)
TTI
FREQUENCY
SUB-CARRIERS
OFDM SYMBOLS
TIME

FIG. 13

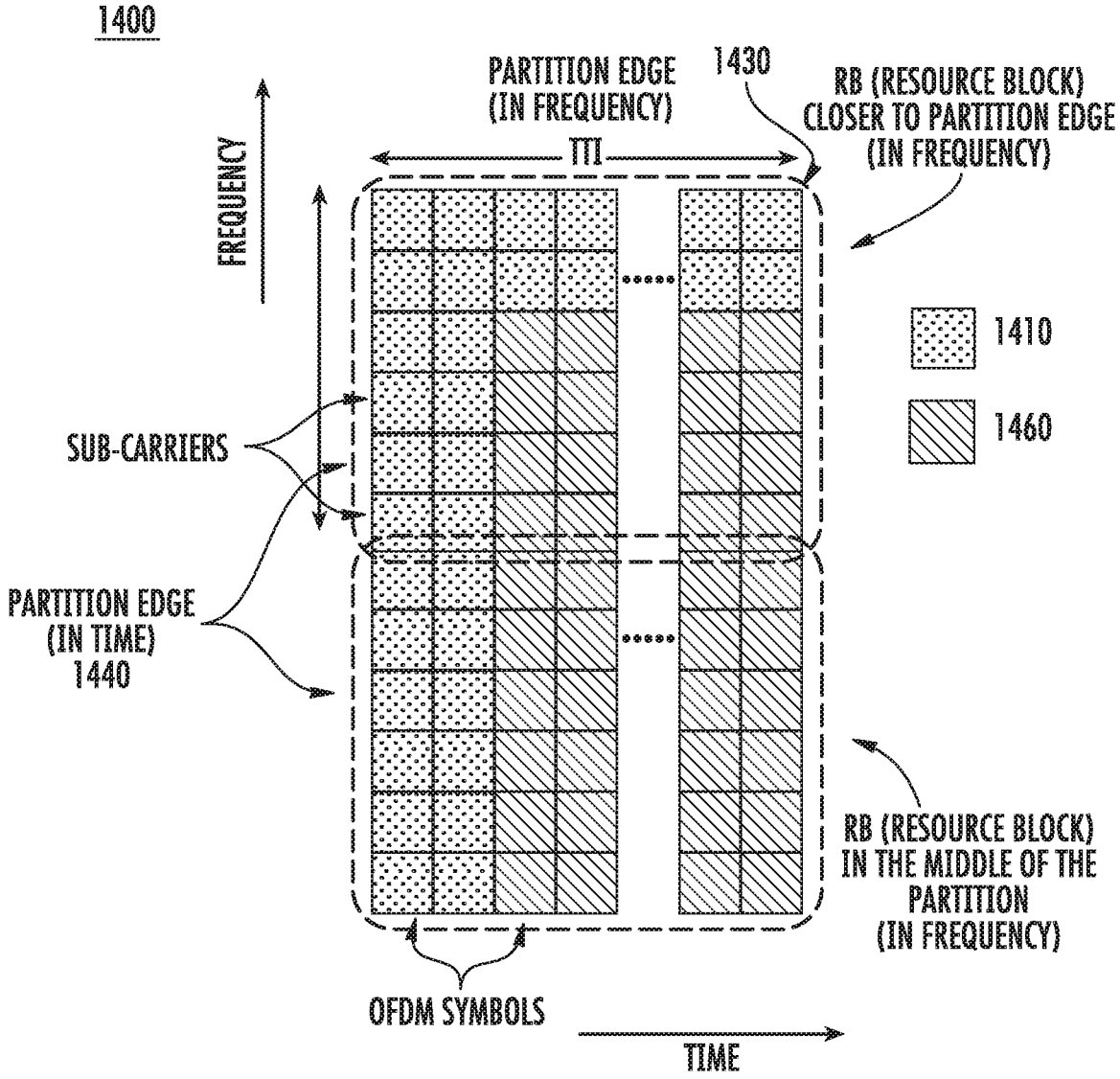
1400
PARTITION EDGE
(IN FREQUENCY)
1430
RB (RESOURCE BLOCK)
CLOSER TO PARTITION EDGE
(IN FREQUENCY)
TTI
FREQUENCY
1410
1460
SUB-CARRIERS
PARTITION EDGE
(IN TIME)
1440
RB (RESOURCE BLOCK)
IN THE MIDDLE OF THE
PARTITION
(IN FREQUENCY)
OFDM SYMBOLS
TIME

FIG. 14

PHYSICAL (PHY) LAYER SOLUTIONS TO SUPPORT USE OF MIXED NUMEROLOGIES IN THE SAME CHANNEL

CROSS-REFERENCE TO RELATED APPLICATION

[0001] This application is a continuation of U.S. patent application Ser. No. 16/300,336 filed Nov. 9, 2018, which is the U.S. National Stage, under 35 U.S.C. § 371, of International Application No. PCT/US2017/032222 filed May 11, 2017, which claims the benefit of U.S. Provisional Application No. 62/334,882, filed May 11, 2016, the contents of which are hereby incorporated by reference herein.

BACKGROUND

[0002] New applications continue to emerge for wireless cellular technology. With these new applications, the importance of supporting higher data rates, lower latency, and massive connectivity continues to increase. For example, support for enhanced Mobile BroadBand (eMBB) communications, Ultra-Reliable and Low-Latency Communications (URLLC) and massive Machine Type Communications (mMTC) have been recommended by the International Telecommunication Union (ITU), along with example usage scenarios and desirable radio access capabilities. With a broad range of applications and usage scenarios, radio access capabilities may differ in importance across the range.

[0003] For example, for eMBB, spectral efficiency, capacity, user data rates (for example, peak data rates, average data rates or both), and mobility may be of high importance. For the eMBB use case, the choice of the waveform, as well as the numerology, has the potential to improve spectral efficiency. For URLLC, user plane latency may be of high importance. The choice of numerology may help address this aspect. For example, for Orthogonal Frequency-Division Multiplexing (OFDM)/Discrete Fourier Transform-Spread-Orthogonal Frequency-Division Multiplexing (DFT-s-OFDM) based waveforms, if wide sub-carrier spacing is configured, the OFDM symbol length is shorter, which may help reduce the physical (PHY) layer latency.

[0004] For mMTC, the connection density, low device complexity, low power consumption, and extended coverage may be of high importance. The choice of the waveform type and the numerology may address some of these requirements. For example, for systems based on the OFDM waveform, a longer cyclic prefix (CP) may be configured for longer OFDM symbols. This may relax the timing requirements and may allow the use of lower cost local oscillators. For example, longer OFDM symbols may be configured with narrower sub-carrier spacing.

SUMMARY

[0005] Discussed herein are methods, apparatuses, and systems for improving system performance and spectral efficiency when using mixed Orthogonal Frequency-Division Modulation (OFDM) waveform numerologies in adjacent partitions in a single channel. Example methods, apparatuses, and systems include mapping a lower order modulation for first resources that are close to a partition edge, and mapping a higher order modulation for second resources closer to the center of the partition and away from the partition edge.

[0006] Specifically, in an example, a wireless transmit/receive unit (WTRU) may map a first set of bits in a first codeword to a higher order modulation scheme and a second set of bits in the first codeword to a lower order modulation scheme. The WTRU may then transmit the first codeword. An eNode-B may then receive the first codeword. Further, the WTRU may determine that data of the first codeword is to be re-transmitted on a second codeword, which may contain the same number of bits as the first codeword. Then, the WTRU may map a first set of bits in the second codeword to the lower order modulation scheme and a second set of bits in the second codeword to the higher order modulation scheme. The first set of bits of the second codeword may contain the same number of bits as the second set of bits of the first codeword and may contain at least a subset of data in the first set of bits of the first codeword. The WTRU may then transmit the second codeword. The eNode-B may then receive the second codeword.

[0007] In a further example, the WTRU may receive an assignment message from an eNode-B including instructions regarding partition determination and resource assignment. As a result, the WTRU may determine at least two partitions of bandwidth for wireless communication based on the assignment message, wherein each of the at least two partitions have differing symbol periods, differing subcarrier spacing or both. Further, the WTRU may assign resource blocks (RBs) of the at least two partitions based on the assignment message, wherein RBs of a partition close in at least one of time resources and frequency resources to an adjacent partition are assigned the lower modulation scheme, and wherein the first codeword is transmitted using assigned RBs. In an example, a first partition may have a first numerology and a second partition may have a second numerology.

[0008] Further, a base station, such as an eNode-B, may determine that data of the first codeword is to be re-transmitted based on a low signal-to-interference-plus-noise ratio (SINR) ratio of the transmitted first codeword. The eNode-B may transmit a message to the WTRU including instructions to re-transmit data of the first codeword. The WTRU may then determine that data of the first codeword is to be re-transmitted is based on receiving the message. In addition, the mapping the bits of the codewords may be based on at least one of pre-defined processing, dynamically signaled processing and processing signaled in downlink control information (DCI).

[0009] In another example, an eNode-B may map a first set of bits in a first codeword to a higher order modulation scheme and a second set of bits in the first codeword to a lower order modulation scheme. The eNode-B may then transmit the first codeword. A WTRU may then receive the first codeword. Further, the eNode-B may determine that data of the first codeword is to be re-transmitted on a second codeword, which may contain the same number of bits as the first codeword. Then, the eNode-B may map a first set of bits in the second codeword to the lower order modulation scheme and a second set of bits in the second codeword to the higher order modulation scheme. The first set of bits of the second codeword may contain the same number of bits as the second set of bits of the first codeword and may contain at least a subset of data in the first set of bits of the first codeword. The eNode-B may then transmit the second codeword and the WTRU may then receive the second codeword.

[0010] In an additional example, the eNode-B may determine at least two partitions of bandwidth for wireless communication, wherein each of the at least two partitions have differing symbol periods, differing subcarrier spacing or both. Further, the eNode-B may assign RBs of the at least two partitions, wherein RBs of a partition close in at least one of time resources and frequency resources to an adjacent partition are assigned the lower modulation scheme, and wherein the first codeword is transmitted using assigned RBs. In an example, a first partition may have a first numerology and a second partition may have a second numerology. In an example, the eNode-B may generate and transmit, to the WTRU, an assignment message including the partition determination and the resource assignment.

[0011] In a further example, an eNode-B may determine that data of the first codeword is to be re-transmitted based on a low SINR ratio of the transmitted first codeword. For example, the eNode-B may make the determination based on other considerations in addition to or instead of the SINR ratio. The eNode-B may then re-transmit the data on the second codeword. In addition, the mapping the bits of the codewords may be based on at least one of pre-defined processing, dynamically signaled processing and processing signaled in DCI.

[0012] In a further example, a WTRU may, in a first codeword, map a first set of bits to a higher order modulation scheme and a second set of bits to a lower order scheme. The WTRU may then transmit the first set of bits in the first codeword at a first allocated power and transmit the second set of bits in the first codeword at a second allocated power.

[0013] In an example, the second allocated power may be great than the first allocated power. Further, the WTRU may determine the second allocated power based on power boosting the first allocated power. In another example, the WTRU may receive an assignment message from a base station including instructions regarding partition determination and resource assignment. The WTRU may then determine at least two partitions of bandwidth for wireless communication based on the assignment message, wherein each of the at least two partitions has differing symbol periods, differing subcarrier spacing or both.

BRIEF DESCRIPTION OF THE DRAWINGS

[0014] A more detailed understanding may be had from the following description, given by way of example in conjunction with the accompanying drawings wherein:

[0015] FIG. **1**A is a system diagram of an example communications system in which one or more disclosed embodiments may be implemented;

[0016] FIG. **1**B is a system diagram of an example wireless transmit/receive unit (WTRU) that may be used within the communications system illustrated in FIG. **1**A;

[0017] FIG. **1**C is a system diagram of an example radio access network and an example core network that may be used within the communications system illustrated in FIG. **1**A;

[0018] FIG. **2** is a diagram illustrating an example of in-band use of mixed numerology in a waveform operating in adjacent partitions in a channel bandwidth;

[0019] FIG. **3** is a diagram illustrating an example of the use of variable modulation orders within a transport block (TB);

[0020] FIG. **4** is a block diagram illustrating an example of a variable modulation order mapping for a single layer, single antenna transmission;

[0021] FIG. **5** is a diagram illustrating an example of changing the modulation mapping for re-transmission;

[0022] FIG. **6** is flowchart diagram of an example of changing the modulation mapping for re-transmission;

[0023] FIG. **7** is a chart illustrating an example of signaling the offset for modulation order selection for partition edge resources;

[0024] FIG. **8** is a diagram illustrating an example of Frequency-Division Multiplexing (FDM) transmission of two codewords on a single layer;

[0025] FIG. **9** is a diagram illustrating an example of an interference model for the band-edge;

[0026] FIGS. **10**A and **10**B are signaling diagrams illustrating examples of the placement of synchronization signals in a mixed numerology time-frequency grid;

[0027] FIG. **11** is a diagram illustrating an example of control channel allocation;

[0028] FIG. **12** is a diagram illustrating example methods for uneven time domain signal-to-noise and interference (SINR) distribution;

[0029] FIG. **13** is a diagram illustrating example methods for uneven time domain SINR distribution per resource block (RB); and

[0030] FIG. **14** is a diagram illustrating example methods for uneven time and frequency domain SINR distribution with a plurality of RBs.

DETAILED DESCRIPTION

[0031] FIG. **1**A is a diagram of an example communications system **100** in which one or more disclosed embodiments may be implemented. The communications system **100** may be a multiple access system that provides content, such as voice, data, video, messaging, broadcast, etc., to multiple wireless users. The communications system **100** may enable multiple wireless users to access such content through the sharing of system resources, including wireless bandwidth. For example, the communications systems **100** may employ one or more channel access methods, such as code division multiple access (CDMA), time division multiple access (TDMA), frequency division multiple access (FDMA), orthogonal FDMA (OFDMA), single-carrier FDMA (SC-FDMA), and the like.

[0032] As shown in FIG. **1**A, the communications system **100** may include wireless transmit/receive units (WTRUs) **102***a*, **102***b*, **102***c*, **102***d*, a radio access network (RAN) **104**, a core network **106**, a public switched telephone network (PSTN) **108**, the Internet **110**, and other networks **112**, though it will be appreciated that the disclosed embodiments contemplate any number of WTRUs, base stations, networks, and/or network elements. Each of the WTRUs **102***a*, **102***b*, **102***c*, **102***d* may be any type of device configured to operate and/or communicate in a wireless environment. By way of example, the WTRUs **102***a*, **102***b*, **102***c*, **102***d* may be configured to transmit and/or receive wireless signals and may include user equipment (UE), a mobile station, a fixed or mobile subscriber unit, a pager, a cellular telephone, a personal digital assistant (PDA), a smartphone, a laptop, a netbook, a personal computer, a wireless sensor, consumer electronics, and the like.

[0033] The communications systems **100** may also include a base station **114***a* and a base station **114***b*. Each of the base

stations **114***a*, **114***b* may be any type of device configured to wirelessly interface with at least one of the WTRUs **102***a*, **102***b*, **102***c*, **102***d* to facilitate access to one or more communication networks, such as the core network **106**, the Internet **110**, and/or the other networks **112**. By way of example, the base stations **114***a*, **114***b* may be a base transceiver station (BTS), a Node-B, an eNode B, a Home Node B, a Home eNode B, a site controller, an access point (AP), a wireless router, and the like. While the base stations **114***a*, **114***b* are each depicted as a single element, it will be appreciated that the base stations **114***a*, **114***b* may include any number of interconnected base stations and/or network elements.

[0034] The base station **114***a* may be part of the RAN **104**, which may also include other base stations and/or network elements (not shown), such as a base station controller (BSC), a radio network controller (RNC), relay nodes, etc. The base station **114***a* and/or the base station **114***b* may be configured to transmit and/or receive wireless signals within a particular geographic region, which may be referred to as a cell (not shown). The cell may further be divided into cell sectors. For example, the cell associated with the base station **114***a* may be divided into three sectors. Thus, in one embodiment, the base station **114***a* may include three transceivers, i.e., one for each sector of the cell. In another embodiment, the base station **114***a* may employ multiple-input multiple-output (MIMO) technology and, therefore, may utilize multiple transceivers for each sector of the cell.

[0035] The base stations **114***a*, **114***b* may communicate with one or more of the WTRUs **102***a*, **102***b*, **102***c*, **102***d* over an air interface **116**, which may be any suitable wireless communication link (for example, radio frequency (RF), microwave, infrared (IR), ultraviolet (UV), visible light, etc.). The air interface **116** may be established using any suitable radio access technology (RAT).

[0036] More specifically, as noted above, the communications system **100** may be a multiple access system and may employ one or more channel access schemes, such as CDMA, TDMA, FDMA, OFDMA, SC-FDMA, and the like. For example, the base station **114***a* in the RAN **104** and the WTRUs **102***a*, **102***b*, **102***c* may implement a radio technology such as Universal Mobile Telecommunications System (UMTS) Terrestrial Radio Access (UTRA), which may establish the air interface **116** using wideband CDMA (WCDMA). WCDMA may include communication protocols such as High-Speed Packet Access (HSPA) and/or Evolved HSPA (HSPA+). HSPA may include High-Speed Downlink Packet Access (HSDPA) and/or High-Speed Uplink Packet Access (HSUPA).

[0037] In another embodiment, the base station **114***a* and the WTRUs **102***a*, **102***b*, **102***c* may implement a radio technology such as Evolved UMTS Terrestrial Radio Access (E-UTRA), which may establish the air interface **116** using Long Term Evolution (LTE) and/or LTE-Advanced (LTE-A).

[0038] In other embodiments, the base station **114***a* and the WTRUs **102***a*, **102***b*, **102***c* may implement radio technologies such as IEEE 802.16 (i.e., Worldwide Interoperability for Microwave Access (WiMAX)), CDMA2000, CDMA2000 1×, CDMA2000 EV-DO, Interim Standard 2000 (IS-2000), Interim Standard 95 (IS-95), Interim Standard 856 (IS-856), Global System for Mobile communications (GSM), Enhanced Data rates for GSM Evolution (EDGE), GSM EDGE (GERAN), and the like.

[0039] The base station **114***b* in FIG. **1**A may be a wireless router, Home Node B, Home eNode B, or access point, for example, and may utilize any suitable RAT for facilitating wireless connectivity in a localized area, such as a place of business, a home, a vehicle, a campus, and the like. In one embodiment, the base station **114***b* and the WTRUs **102***c*, **102***d* may implement a radio technology such as IEEE 802.11 to establish a wireless local area network (WLAN). In another embodiment, the base station **114***b* and the WTRUs **102***c*, **102***d* may implement a radio technology such as IEEE 802.15 to establish a wireless personal area network (WPAN). In yet another embodiment, the base station **114***b* and the WTRUs **102***c*, **102***d* may utilize a cellular-based RAT (for example, WCDMA, CDMA2000, GSM, LTE, LTE-A, etc.) to establish a picocell or femtocell. As shown in FIG. **1**A, the base station **114***b* may have a direct connection to the Internet **110**. Thus, the base station **114***b* may not be required to access the Internet **110** via the core network **106**.

[0040] The RAN **104** may be in communication with the core network **106**, which may be any type of network configured to provide voice, data, applications, and/or voice over internet protocol (VoIP) services to one or more of the WTRUs **102***a*, **102***b*, **102***c*, **102***d*. For example, the core network **106** may provide call control, billing services, mobile location-based services, pre-paid calling, Internet connectivity, video distribution, etc., and/or perform high-level security functions, such as user authentication. Although not shown in FIG. **1**A, it will be appreciated that the RAN **104** and/or the core network **106** may be in direct or indirect communication with other RANs that employ the same RAT as the RAN **104** or a different RAT. For example, in addition to being connected to the RAN **104**, which may be utilizing an E-UTRA radio technology, the core network **106** may also be in communication with another RAN (not shown) employing a GSM radio technology.

[0041] The core network **106** may also serve as a gateway for the WTRUs **102***a*, **102***b*, **102***c*, **102***d* to access the PSTN **108**, the Internet **110**, and/or other networks **112**. The PSTN **108** may include circuit-switched telephone networks that provide plain old telephone service (POTS). The Internet **110** may include a global system of interconnected computer networks and devices that use common communication protocols, such as the transmission control protocol (TCP), user datagram protocol (UDP) and the internet protocol (IP) in the TCP/IP internet protocol suite. The networks **112** may include wired or wireless communications networks owned and/or operated by other service providers. For example, the networks **112** may include another core network connected to one or more RANs, which may employ the same RAT as the RAN **104** or a different RAT.

[0042] Some or all of the WTRUs **102***a*, **102***b*, **102***c*, **102***d* in the communications system **100** may include multi-mode capabilities, i.e., the WTRUs **102***a*, **102***b*, **102***c*, **102***d* may include multiple transceivers for communicating with different wireless networks over different wireless links. For example, the WTRU **102***c* shown in FIG. **1**A may be configured to communicate with the base station **114***a*, which may employ a cellular-based radio technology, and with the base station **114***b*, which may employ an IEEE 802 radio technology.

[0043] FIG. **1**B is a system diagram of an example WTRU **102**. As shown in FIG. **1**B, the WTRU **102** may include a processor **118**, a transceiver **120**, a transmit/receive element

122, a speaker/microphone 124, a keypad 126, a display/touchpad 128, non-removable memory 130, removable memory 132, a power source 134, a global positioning system (GPS) chipset 136, and other peripherals 138. It will be appreciated that the WTRU 102 may include any sub-combination of the foregoing elements while remaining consistent with an embodiment.

[0044] The processor 118 may be a general purpose processor, a special purpose processor, a conventional processor, a digital signal processor (DSP), a plurality of microprocessors, one or more microprocessors in association with a DSP core, a controller, a microcontroller, Application Specific Integrated Circuits (ASICs), Field Programmable Gate Array (FPGAs) circuits, any other type of integrated circuit (IC), a state machine, and the like. The processor 118 may perform signal coding, data processing, power control, input/output processing, and/or any other functionality that enables the WTRU 102 to operate in a wireless environment. The processor 118 may be coupled to the transceiver 120, which may be coupled to the transmit/receive element 122. While FIG. 1B depicts the processor 118 and the transceiver 120 as separate components, it will be appreciated that the processor 118 and the transceiver 120 may be integrated together in an electronic package or chip.

[0045] The transmit/receive element 122 may be configured to transmit signals to, or receive signals from, a base station (for example, the base station 114*a*) over the air interface 116. For example, in one embodiment, the transmit/receive element 122 may be an antenna configured to transmit and/or receive RF signals. In another embodiment, the transmit/receive element 122 may be an emitter/detector configured to transmit and/or receive IR, UV, or visible light signals, for example. In yet another embodiment, the transmit/receive element 122 may be configured to transmit and receive both RF and light signals. It will be appreciated that the transmit/receive element 122 may be configured to transmit and/or receive any combination of wireless signals.

[0046] In addition, although the transmit/receive element 122 is depicted in FIG. 1B as a single element, the WTRU 102 may include any number of transmit/receive elements 122. More specifically, the WTRU 102 may employ MIMO technology. Thus, in one embodiment, the WTRU 102 may include two or more transmit/receive elements 122 (for example, multiple antennas) for transmitting and receiving wireless signals over the air interface 116.

[0047] The transceiver 120 may be configured to modulate the signals that are to be transmitted by the transmit/receive element 122 and to demodulate the signals that are received by the transmit/receive element 122. As noted above, the WTRU 102 may have multi-mode capabilities. Thus, the transceiver 120 may include multiple transceivers for enabling the WTRU 102 to communicate via multiple RATs, such as UTRA and IEEE 802.11, for example.

[0048] The processor 118 of the WTRU 102 may be coupled to, and may receive user input data from, the speaker/microphone 124, the keypad 126, and/or the display/touchpad 128 (for example, a liquid crystal display (LCD) display unit or organic light-emitting diode (OLED) display unit). The processor 118 may also output user data to the speaker/microphone 124, the keypad 126, and/or the display/touchpad 128. In addition, the processor 118 may access information from, and store data in, any type of suitable memory, such as the non-removable memory 130 and/or the removable memory 132. The non-removable memory 130 may include random-access memory (RAM), read-only memory (ROM), a hard disk, or any other type of memory storage device. The removable memory 132 may include a subscriber identity module (SIM) card, a memory stick, a secure digital (SD) memory card, and the like. In other embodiments, the processor 118 may access information from, and store data in, memory that is not physically located on the WTRU 102, such as on a server or a home computer (not shown).

[0049] The processor 118 may receive power from the power source 134, and may be configured to distribute and/or control the power to the other components in the WTRU 102. The power source 134 may be any suitable device for powering the WTRU 102. For example, the power source 134 may include one or more dry cell batteries (for example, nickel-cadmium (NiCd), nickel-zinc (NiZn), nickel metal hydride (NiMH), lithium-ion (Li-ion), etc.), solar cells, fuel cells, and the like.

[0050] The processor 118 may also be coupled to the GPS chipset 136, which may be configured to provide location information (for example, longitude and latitude) regarding the current location of the WTRU 102. In addition to, or in lieu of, the information from the GPS chipset 136, the WTRU 102 may receive location information over the air interface 116 from a base station (for example, base stations 114*a*, 114*b*) and/or determine its location based on the timing of the signals being received from two or more nearby base stations. It will be appreciated that the WTRU 102 may acquire location information by way of any suitable location-determination method while remaining consistent with an embodiment.

[0051] The processor 118 may further be coupled to other peripherals 138, which may include one or more software and/or hardware modules that provide additional features, functionality and/or wired or wireless connectivity. For example, the peripherals 138 may include an accelerometer, an e-compass, a satellite transceiver, a digital camera (for photographs or video), a universal serial bus (USB) port, a vibration device, a television transceiver, a hands free headset, a Bluetooth® module, a frequency modulated (FM) radio unit, a digital music player, a media player, a video game player module, an Internet browser, and the like.

[0052] FIG. 1C is a system diagram of the RAN 104 and the core network 106 according to an embodiment. As noted above, the RAN 104 may employ an E-UTRA radio technology to communicate with the WTRUs 102*a*, 102*b*, 102*c* over the air interface 116. The RAN 104 may also be in communication with the core network 106.

[0053] The RAN 104 may include eNode-Bs 140*a*, 140*b*, 140*c*, though it will be appreciated that the RAN 104 may include any number of eNode-Bs while remaining consistent with an embodiment. The eNode-Bs 140*a*, 140*b*, 140*c* may each include one or more transceivers for communicating with the WTRUs 102*a*, 102*b*, 102*c* over the air interface 116. In one embodiment, the eNode-Bs 140*a*, 140*b*, 140*c* may implement MIMO technology. Thus, the eNode-B 140*a*, for example, may use multiple antennas to transmit wireless signals to, and receive wireless signals from, the WTRU 102*a*.

[0054] Each of the eNode-Bs 140*a*, 140*b*, 140*c* may be associated with a particular cell (not shown) and may be configured to handle radio resource management decisions, handover decisions, scheduling of users in the uplink and/or

downlink, and the like. As shown in FIG. **1**C, the eNode-Bs **140***a*, **140***b*, **140***c* may communicate with one another over an X2 interface.

[0055] The core network **106** shown in FIG. **1**C may include a mobility management entity gateway (MME) **142**, a serving gateway **144**, and a packet data network (PDN) gateway **146**. While each of the foregoing elements are depicted as part of the core network **106**, it will be appreciated that any one of these elements may be owned and/or operated by an entity other than the core network operator.

[0056] The MME **142** may be connected to each of the eNode-Bs **140***a*, **140***b*, **140***c* in the RAN **104** via an S1 interface and may serve as a control node. For example, the MME **142** may be responsible for authenticating users of the WTRUs **102***a*, **102***b*, **102***c*, bearer activation/deactivation, selecting a particular serving gateway during an initial attach of the WTRUs **102***a*, **102***b*, **102***c*, and the like. The MME **142** may also provide a control plane function for switching between the RAN **104** and other RANs (not shown) that employ other radio technologies, such as GSM or WCDMA.

[0057] The serving gateway **144** may be connected to each of the eNode Bs **140***a*, **140***b*, **140***c* in the RAN **104** via the S1 interface. The serving gateway **144** may generally route and forward user data packets to/from the WTRUs **102***a*, **102***b*, **102***c*. The serving gateway **144** may also perform other functions, such as anchoring user planes during inter-eNode B handovers, triggering paging when downlink data is available for the WTRUs **102***a*, **102***b*, **102***c*, managing and storing contexts of the WTRUs **102***a*, **102***b*, **102***c*, and the like.

[0058] The serving gateway **144** may also be connected to the PDN gateway **146**, which may provide the WTRUs **102***a*, **102***b*, **102***c* with access to packet-switched networks, such as the Internet **110**, to facilitate communications between the WTRUs **102***a*, **102***b*, **102***c* and IP-enabled devices.

[0059] The core network **106** may facilitate communications with other networks. For example, the core network **106** may provide the WTRUs **102***a*, **102***b*, **102***c* with access to circuit-switched networks, such as the PSTN **108**, to facilitate communications between the WTRUs **102***a*, **102***b*, **102***c* and traditional land-line communications devices. For example, the core network **106** may include, or may communicate with, an IP gateway (for example, an IP multimedia subsystem (IMS) server) that serves as an interface between the core network **106** and the PSTN **108**. In addition, the core network **106** may provide the WTRUs **102***a*, **102***b*, **102***c* with access to the networks **112**, which may include other wired or wireless networks that are owned and/or operated by other service providers.

[0060] Other network **112** may further be connected to an IEEE 802.11 based wireless local area network (WLAN) **160**. The WLAN **160** may include an access router **165**. The access router may contain gateway functionality. The access router **165** may be in communication with a plurality of access points (APs) **170***a*, **170***b*. The communication between access router **165** and APs **170***a*, **170***b* may be via wired Ethernet (IEEE 802.3 standards), or any type of wireless communication protocol. AP **170***a* is in wireless communication over an air interface with WTRU **102***d*.

[0061] With new applications emerging for cellular technology, the importance of supporting higher data rates, lower latency, and massive connectivity continues to increase. For example, the importance of supporting enhanced Mobile BroadBand (eMBB) communications, Ultra-Reliable and Low-Latency Communications (URLLC) and massive Machine Type Communications (mMTC) continues to increase. When multiple applications with differing goals may be supported, developing effective means for multiplexing different services in a radio access network becomes increasingly important.

[0062] Wireless communication systems using the Orthogonal Frequency-Division Multiplexing (OFDM) waveform, such as 3GPP LTE and IEEE 802.11, may use a fixed numerology of the OFDM waveform across the allocated system bandwidth. However, with new applications and usage scenarios emerging for cellular technology, the use of mixed numerology may be an attractive way to support different services in the same channel. As used herein, numerology may refer to one or more of the following: sub-carrier spacing, OFDM symbol length, or cyclic prefix (CP) overhead. A resource element may refer to a resource defined by one subcarrier and one symbol.

[0063] FIG. **2** is a diagram illustrating an example of in-band use of mixed numerology in a waveform operating in adjacent partitions in a channel bandwidth. As shown in an example in diagram **200**, three numerologies may be used by three different types of communications. For example, a first numerology **210** may be used for eMBB and include resource elements, such as resource element **220**, which have a first sub-carrier spacing and a first OFDM symbol duration. Further, a second numerology **230** may be used for URLLC and include resource elements, such as resource element **240**, which have a second sub-carrier spacing and a second OFDM symbol duration. In addition, a third numerology **250** may be used for mMTC and include resource elements, such as resource element **260**, which have a third sub-carrier spacing and a third OFDM symbol duration.

[0064] The OFDM waveform may have high side-lobes in the frequency domain, and high out-of-band (**00**B) emissions. If OFDM signals with mixed waveform numerology are transmitted adjacent to each other in the same frequency channel, inter-numerology interference may occur. In the spectral domain, the side-lobes of one numerology may decay slowly with frequency (as a function of 1/f), and may create interference to the sub-carriers of the other numerology in the adjacent partition. This interference may severely degrade the signal-to-noise ratio (SNR) in the adjacent partition, thus limiting the system performance. For example, the interference may limit the data rates that can be attained.

[0065] In other scenarios, the system may operate in frequency selective channels, whereby there may be a significant SNR variability within the system bandwidth. Additionally, parts of the channel may suffer from more interference than others. Relying on traditional scheduling to mitigate this SNR variability may not be sufficient for the usage scenarios considered for fifth generation (5G) applications.

[0066] In other scenarios, the system may operate in frequency selective channels with non-negligible delay spread. In these scenarios, when there may be transitions or discontinuities at the beginning of a sub-frame or transmission time interval (TTI), the first symbol of the transmission may be impacted by interference, and the received signal-to-noise and interference (SINR) ratio for that symbol may be degraded. In examples, the first symbol may be the first

OFDM symbol or the first Discrete Fourier Transform-Spread-Orthogonal Frequency-Division Multiplexing (DFT-s-OFDM) symbol.

[0067] Solutions are therefore needed to improve the system performance and spectral efficiency when mixed OFDM waveform numerologies are used in adjacent partitions in the same channel, or when significant SNR variability is encountered within the system bandwidth. Embodiments, examples and solutions described herein may be applied to scenarios with an uneven distribution of SNR within the channel bandwidth, including, but not limited to, mixed numerologies. Examples and embodiments are included herein for downlink (DL) transmissions; however, one of ordinary skill in the art will appreciate that DL transmissions may be used in non-limiting examples of applications. Accordingly, the examples and embodiments may apply to uplink (UL), sidelink (SL) and the like, and still be consistent with the solutions described herein. The terms UL and/or SL may be substituted for DL in the examples and embodiments described herein, and still be consistent with the solutions described herein. In some embodiments and examples, the terms downlink control information (DCI), control information, control channel, control message, may be used interchangeably and still be consistent with the solutions described herein.

[0068] Discussed herein are methods, apparatuses, and systems for improving system performance and spectral efficiency when using mixed OFDM waveform numerologies in adjacent partitions in a single channel. Example methods, apparatuses, and systems include mapping a lower order modulation for first resources that are close to a partition edge, and mapping a higher order modulation for second resources closer to the center of the partition and away from the partition edge.

[0069] In a specific example, a WTRU may map a first set of bits in a first codeword to a higher order modulation scheme and a second set of bits in the first codeword to a lower order modulation scheme. The WTRU may then transmit the first codeword. An eNode-B may then receive the first codeword. Further, the WTRU may determine that data of the first codeword is to be re-transmitted on a second codeword, which may contain the same number of bits as the first codeword. Then, the WTRU may map a first set of bits in the second codeword to the lower order modulation scheme and a second set of bits in the second codeword to the higher order modulation scheme. The first set of bits of the second codeword may contain the same number of bits as the second set of bits of the first codeword and may contain at least a subset of data in the first set of bits of the first codeword. The WTRU may then transmit the second codeword. The eNode-B may then receive the second codeword.

[0070] Additional further examples include assigning a first codeword to a spatial layer, wherein the first codeword is mapped in the frequency domain to first resource blocks (RBs) at a partition edge, and wherein the first codeword is be configured to use a robust modulation and coding scheme (MCS). Additional examples include assigning a second codeword to the spatial layer, wherein the second codeword is mapped in the frequency domain to second RBs located toward the center of the partition, and wherein the second codeword is configured to use a more aggressive MCS; and multiplexing the first codeword and the second codeword in a Frequency-Division Multiplexing (FDM) fashion.

[0071] Further, discussed herein are example methods, apparatuses, and systems for improving system performance and spectral efficiency when using mixed OFDM waveform numerologies in adjacent partitions in a single channel. Examples may include performing demodulation reference signal (DMRS) based beamforming on a band edge to minimize interference on the direction of a WTRU of an adjacent service and maximize a transmission efficiency for the service's own WTRU.

[0072] Also, herein are example methods, apparatuses, and systems for reducing the impact of interference on the accuracy of the channel estimation in a system with mixed numerology. Examples may include introducing an additional power offset setting for band-edge transmissions; using a different set of power settings for demodulation of reference signals required for channel estimation; and applying the power boosting for the reference signals on reference resource elements (REs) located on the band-edge.

[0073] In addition, discussed herein are methods, apparatuses, and systems for synchronization downlink transmission for mixed numerology systems with flexible channel bandwidths. Examples may include using a common numerology region to carry synchronization signals (SSs), wherein the common numerology region is accessible to WTRUs using a first numerology and WTRUs using a second numerology.

[0074] Moreover, discussed herein are methods, apparatuses, and systems for improving uplink transmission performance in mixed numerology systems. Examples may include transmitting an uplink control channel using different frequency resources from different antennas. Examples may include lowering a coding rate of control information transmitted in partition edge regions. Examples may include transmitting control information on resources that are not mapped partition edge.

[0075] Other examples discussed herein are methods, apparatuses, and systems for reducing uneven SINR distribution across a sub-frame. Examples may include configuring a first one or more symbols of the sub-frame to use a lower order modulation and configuring a remainder of symbols of the sub-frame to use a higher order modulation.

[0076] The following description may include examples of variable modulation orders within a resource assignment. In an example, mapping variable modulation orders for a single transport block (TB) assignment may be disclosed.

[0077] FIG. **3** is a diagram illustrating an example of the use of variable modulation orders within a TB. As shown in an example in diagram **300**, for a single TB assignment to a WTRU, the modulation mapping may use a lower order modulation for the resources that are close to the partition edge. In addition, a higher order modulation may be used for the resources closer to the center of the partition and away from the partition edge to mitigate the SINR loss at the partition edge.

[0078] In an example shown in FIG. **3**, within the resource assignment of one codeword (CW) transmission, which may be transmitted on one TB on a first partition **310** with a first numerology, resources, such as RBs **334**, which are close to the partition edge may use a low order modulation to mitigate the SINR loss at the partition edge. In an example, the low order modulation may be Quadrature Phase Shift Keying (QPSK) at the partition edge. The resources further away from the partition edge, such as RBs **332**, may be assigned a higher order modulation, such as 16-Quadrature

Amplitude Modulation (QAM) or 64-QAM, if the channel conditions allow it. Similarly, for the resource assignment of one CW, which may be transmitted on one TB on a second partition **360** with a second numerology, resources, such as RBs **384** close to the partition edge may use a low order modulation, while the other RBs **382**, further away from the partition edge, may use a higher order modulation.

[0079] As shown in FIG. **3**, frequency in the horizontal axis may be plotted against SINR in the horizontal axis. Such a plot may show that the resources closest to the partition edge on both sides of the partition have a lower SINR than resources further away from the partition edge. This SINR degradation is due to interference as a result of the numerology partition. For example, RBs **334** with an SINR curve **350** and RBs **384** with an SINR curve **355** may have lower SINRs than RBs **332** with an SINR curve **320** and RBs **382** with an SINR curve **370**. A similar plot, not shown, may be created with time plotted against SINR for the RBs in FIG. **3**. Such a plot may similarly show that the resources closer to the partition edge on both sides of the partition have a lower SINR than resources further away from the partition edge.

[0080] FIG. **4** is a block diagram illustrating an example of a variable modulation order mapping for a single layer, single antenna transmission. Mapping different modulation orders to different RBs, as described in the above example, may be achieved for single layer transmission using the example shown in block diagram **400**. Block diagram **400** also shows an example of mapping different modulation orders to different RBs for single antenna transmission.

[0081] For example, input bits may be input into a channel coding block **410** for coding. The coded bits available at the output of the channel coding block **410** may be mapped to modulation symbols using a "Modulation Mapper" block. For example, a subset of the coded bits may be processed by a high order modulation mapper block **430** and mapped to the IFFT input to the sub-carriers close to the partition center **455**, when output by a resource element mapper **440**. The remaining subset of the coded bits may be processed by the low order modulation mapper block **420** and mapped to the IFFT input to the sub-carriers close to the partition edge **450**, when output by a resource element mapper **440**. An OFDM symbol generator **470** may then receive the mapped bits and generate corresponding OFDM symbols.

[0082] FIG. **5** is a diagram illustrating an example of changing the modulation mapping for re-transmission. When re-transmissions of the transport block are needed, the transmitter may change the mapping order of the coded bits. In an example, the transmitter may change the mapping order of the coded bits in order to randomize the distribution of the potential errors across the transport block. For example, the subset that was mapped to the partition edge using a low order modulation scheme for the new transmission may be mapped to the partition middle (which may be away from the partition edge) using a higher order modulation scheme for a re-transmission. In this way, during the re-transmission, a different sub-set of the transport block bits may be subject to lower SINR (which may be at the partition edge), as compared to the sub-set of bits subject to low SINR during the first transmission. This may result in randomizing the distribution of the bit errors across the transport block, which increases the diversity gain. In this way, different bits may be in error in the first transmission compared with the re-transmission. The new transmission may be a transmission of a codeword and the re-transmission may be a re-transmission of the codeword.

[0083] In an example shown in diagram **500**, for a new data transmission, the first N_1 bits **520** of the coded block of a codeword **510** may be mapped to a higher order modulation scheme, and the last $N-N_1$ bits **530** of the coded block of the codeword **510** may be mapped to a lower order modulation scheme. For the re-transmission, for example when the same amount of resources are allocated as for the new data transmission, the first $N-N_1$ bits **560** of the coded block of the codeword **550** may be mapped to the lower order modulation scheme, while the last N_1 bits **570** may be mapped to the higher order modulation scheme.

[0084] In this way, the number of bits using each modulation scheme remains the same in the new data transmission of a codeword and in the re-transmission of the codeword. For example, both $N-N_1$ bits **530** and $N-N_1$ bits **560** contain the same number of bits and may be transmitted using the lower order modulation scheme. Likewise, N_1 bits **520** and N_1 bits **570** contain the same number of bits and may be transmitted using the higher order modulation scheme. The change in the sequential processing of the coded bits, for example, high order modulation followed by low order modulation for a new data transmission and low order modulation followed by high order modulation for a re-transmission, may be either pre-defined, or signaled within the DCI.

[0085] FIG. **6** is flowchart diagram of an example of changing the modulation mapping for re-transmission. In an example shown in flowchart **600**, a WTRU may map a first set of bits in a first codeword to a higher order modulation scheme and a second set of bits in the first codeword to a lower order modulation scheme **620**. The WTRU may then transmit the first codeword **630**. An eNode-B may then receive the first codeword. Further, the WTRU may determine that data of the first codeword is to be re-transmitted on a second codeword **640**, which may contain the same number of bits as the first codeword. Then, the WTRU may map a first set of bits in the second codeword to the lower order modulation scheme and a second set of bits in the second codeword to the higher order modulation scheme **650**. The first set of bits of the second codeword may contain the same number of bits as the second set of bits of the first codeword and may contain at least a subset of data in the first set of bits of the first codeword. The WTRU may then transmit the second codeword **660**. The eNode-B may then receive the second codeword.

[0086] In a further example, the WTRU may receive an assignment message from an eNode-B including instructions regarding partition determination and resource assignment. As a result, the WTRU may determine at least two partitions of bandwidth for wireless communication based on the assignment message, wherein each of the at least two partitions have differing symbol periods, differing subcarrier spacing or both. Further, the WTRU may assign RBs of the at least two partitions based on the assignment message, wherein RBs of a partition close in at least one of time resources and frequency resources to an adjacent partition are assigned the lower modulation scheme, and wherein the first codeword is transmitted using assigned RBs. In an example, a first partition may have a first numerology and a second partition may have a second numerology.

[0087] Further, a base station, such as an eNode-B, may determine that data of the first codeword is to be re-

transmitted based on a low SINR ratio of the transmitted first codeword. In an example, the eNode-B may make the determination based on other considerations in addition to or instead of the SINR ratio. The eNode-B may transmit a message to the WTRU including instructions to re-transmit data of the first codeword. The WTRU may then determine that data of the first codeword is to be re-transmitted is based on receiving the message from the eNode-B. In addition, the mapping the bits of the codewords may be based on at least one of pre-defined processing, dynamically signaled processing and processing signaled in DCI.

[0088] In another example, an eNode-B may map a first set of bits in a first codeword to a higher order modulation scheme and a second set of bits in the first codeword to a lower order modulation scheme. The eNode-B may then transmit the first codeword. A WTRU may then receive the first codeword. Further, the eNode-B may determine that data of the first codeword is to be re-transmitted on a second codeword, which may contain the same number of bits as the first codeword. Then, the eNode-B may map a first set of bits in the second codeword to the lower order modulation scheme and a second set of bits in the second codeword to the higher order modulation scheme. The first set of bits of the second codeword may contain the same number of bits as the second set of bits of the first codeword and may contain at least a subset of data in the first set of bits of the first codeword. The eNode-B may then transmit the second codeword. The WTRU may then receive the second codeword.

[0089] In an additional example, the eNode-B may determine at least two partitions of bandwidth for wireless communication, wherein each of the at least two partitions have differing symbol periods, differing subcarrier spacing or both. Further, the eNode-B may assign RBs of the at least two partitions, wherein RBs of a partition close in at least one of time resources and frequency resources to an adjacent partition are assigned the lower modulation scheme, and wherein the first codeword is transmitted using assigned RBs. In an example, a first partition may have a first numerology and a second partition may have a second numerology. In an example, the eNode-B may generate and transmit, to the WTRU, an assignment message including instructions regarding the partition determination and the resource assignment.

[0090] Moreover, an eNode-B may determine that data of the first codeword is to be re-transmitted based on a low SINR ratio of the transmitted first codeword. In an example, the eNode-B may make the determination based on other considerations in addition to or instead of the SINR ratio. The eNode-B may then re-transmit the data on the second codeword. In addition, the mapping the bits of the codewords may be based on at least one of pre-defined processing, dynamically signaled processing and processing signaled in DCI.

[0091] The following examples may include metrics used for variable modulation order per TB. In examples, if a base station assigns both partition edge and partition center resources, such as RBs, for a single TB transmission to a WTRU, the base station may select the MCS based on the channel state reports, or more specifically the channel quality indicators (CQIs) reported by the user. The granularity of CQI reported may depend on the type of channel state reports, such as aperiodic vs. periodic, wideband vs. WTRU-selected.

[0092] For example, the WTRU may provide a single CQI report based on the entire cell bandwidth, as in the case of an aperiodic wideband report. In another example, the WTRU may divide the total system (for example, component carrier) bandwidth into several parts and provide the wideband CQI for each bandwidth part as well as the best subset of RBs (or subband) within that bandwidth part. In yet another example, the WTRU may choose to report the CQIs for only a certain set of subbands. The choice of subbands may be WTRU-selected, in which case these subbands may be its best subbands, or network configured.

[0093] If the base station assigns both partition edge and partition center resources (RBs) for a single TB transmission from a WTRU, the base station may select the MCS based on the channel state reports or channel measurements. The base station may measure the channel by using reference signals transmitted by the WTRU. For example the base station may measure sounding reference signals transmitted by the WTRU. The transmission parameters of the reference signals transmitted on different parts of the partition may be different. For example, reference signals transmitted on the edges may have higher power than the reference signals transmitted in the middle of the partition.

[0094] In addition to channel state reports and/or measurements, the base station may utilize various other parameters when determining the choice of modulation order for each RB or group of RBs. The other parameters may include, for example, a set of available resources, amount of data that needs to be transmitted, and the like. Depending on the availability and granularity of the CQI reports, as described above, the base station may have the flexibility to utilize a wide variety of CQI reports as well as the total number of resources (RBs) available when selecting the modulation order for each set (for example, partition edge or partition center) of resources for this TB. The CQI reports may include, for example, wideband and best subband CQIs of each bandwidth part and the like.

[0095] The base station may choose to utilize the same modulation order for both partition edge and partition center resources if, for example, the group of RBs assigned in each partition have similar CQI values. This may occur if the resources assigned in each partition are amongst the best subbands as described above, or if wideband CQIs reported for each partition are utilized and the reported wideband CQIs for each partition are similar.

[0096] In another scenario, for example when resource availability is not a constraining factor, or if the base station only has a small amount of data to transmit, it may select the lower, more conservative MCS for both partition edge and partition center resources. In such a scenario, the MCS may be chosen based on CQI of the boundary edge resources.

[0097] The following examples may include signaling the variable modulation order to the WTRU. In addition, examples which follow may include calculating the TBS for assignments with variable modulation order.

[0098] A WTRU or group of WTRUs may be configured semi-statically, for example, via higher layer signaling, with one or more of the following parameters. In an example, a parameter may be a region in the frequency domain, for example, RBs, where a particular modulation type, for example QPSK, may be used. A parameter may be a particular modulation type to use, for example QPSK. A parameter may be enabling or disabling the use of multiple modulation types for a transport block.

[0099] Using control signaling, such as, for example the DCI, the base station may dynamically signal one or more of the following information to the WTRU or group of WTRUs. For example, information from which the WTRU may determine the coding rate or the transport block size (TBS) may be signaled by the base station. In another example, information from which the WTRU may determine at least one modulation type may be signaled. In a further example, information from which the WTRU may determine the RB, or resources, for the assigned TB may be signaled.

[0100] For example, when a single modulation order is utilized for the TB, existing L1/L2 control signaling may be used to inform the WTRU of the various transmission parameters. The transmission parameters may include, for example, MCS and RB allocation. For example, DCI format 1 may be utilized in the case where assigned partition center and partition edge resources are non-contiguous, whereas the more compact DCI format 1A may be utilized for the case where the assigned resources are contiguous.

[0101] FIG. **7** is a chart illustrating an example of signaling the offset for modulation order selection for partition edge resources. In an example shown in chart **700**, when the base station selects two modulation orders for the resources, the control information may carry the MCS information for the partition center resources **710**. The information for the modulation order of the partition edge resources **750** may be signaled in the same message, as an offset to the MCS information of the center resources. In an example, the offset may be represented using a N-bit value (for example, a bit map), whereby a zero value for the offset indicates a constant modulation order within the TB and the non-zero values point to the specific row of the modulation table for PDSCH to be used for the partition edge resources, as shown in FIG. **7**. For example, the signaled MCS information for the partition center resources **710** may include a modulation order of 4 and a code rate of about 0.4. Further, the signaled offset for the modulation order of the partition edge resources **750** may include a modulation order of 2 and a code rate of about 0.4. In an example, the standard mapping of the MCS to code rate and modulation type may be used.

[0102] In another example, when the base station selects two different modulation orders for the resources within the same TB, the base station may use L1/L2 control signaling to signal the MCS for the resources mapped to the center or the partition and the MCS for the resources mapped to the partition edge. In examples, the resources may be resource blocks or resource block groups.

[0103] In another example, the base station may signal the MCS for the resources mapped to the center of the partition and may signal the modulation order and the coding rate for the resources mapped to the partition edge. The base station may signal the MCS for the center RBs and only signal the coding rate for the pre-configured RBs if, for example, the WTRU is semi-statically configured to use a particular modulation type in a particular region in the frequency domain. In this case, the WTRU may use the resource allocation to autonomously determine if any of the allocated RBs are in the semi-statically configured region. If so, it may use the semi-statically configured modulation order to map/de-map the symbols, calculate the TBS for the forward error correction (FEC) encoder/decoder processing, and the like.

[0104] In another example, the DCI that carries the MCS signaling for the center RBs and for the edge RBs may signal the resource block allocation. For example, the DCI may indicate the number of and location of partition edge RBs that may be configured for a lower order modulation.

[0105] When a WTRU is either dynamically signaled or semi-statically configured to use multiple different modulation orders in a transport block, one or more of the following may apply, which may use parameters. The WTRU may determine whether to use one modulation type or multiple modulation types for transmitting the data in the UL or for receiving the data in the DL. In an example, the multiple modulation types may be two modulation types. The WTRU may make the determination based on at least one of the following: whether or not use of multiple modulation types has been enabled, and the location of the RBs (for example, for the frequency location). For example, the WTRU may use multiple modulation types when the frequency location of some of the allocated RBs is in a particular location. The particular location may be the edge of the band, within x kilohertz (kHz) from the edge of the band, or configured by higher layer signaling.

[0106] The WTRU may use at least one of the transmission parameters that may be signaled to determine the transport block size, for example, for the FEC coding chain, decoding chain, or both. The transmission parameters may include at least one of the following: an MCS for a first set of RBs (for example, the center RBs), an MCS for a second set of RBs (for example, the edge RBs), a modulation order for a second set of RBs, a coding rate corresponding to the bits mapped to the second set of RBs, an offset of the coding rate for the second set of RBs with respect to the coding rate corresponding to the first set of RBs, and a resource-block allocation. The resource-block allocation may be contiguous and the WTRU may autonomously determine which of the allocated RBs may be in the second set of RBs. In an example, the second set of RBs may be edge RBs. The resource-block allocation may be non-contiguous and the WTRU may use separate indications for the RB allocation for the first set of RBs and for the second set of RBs.

[0107] For example, if the base station signals the MCS for the first set of RBs, the MCS for the second set of RBs, and the RB allocation, the WTRU may determine the number of RBs in the first set, the number of RBs in the second set, and use a pre-defined mapping to determine the transport block size that may be supported by the first set of RBs and the transport block size that may be supported by a second set of RBs to calculate the effective TBS that may be used.

[0108] In another example, if the base station signals the MCS for the first set of RBs and the modulation order for the second set of RBs, the WTRU may determine the number of RBs in the first set, the number of RBs in the second set, and may use a pre-defined mapping to determine the transport block size that may be supported by the first set of RBs. The WTRU may then determine the approximate coding rate supported by the first set of RBs, and use that first coding rate, in conjunction with the modulation type and the number of RBs in the second set, to calculate the TBS that may be supported in the second set of RBs. The TBS for the second set of RBs may be then selected from a mapping table, as the nearest TBS smaller than the value calculated before. One of ordinary skill in the art will appreciate that other examples of how the WTRU may make the determi-

nation of the total TBS to be used jointly for the first and the second set of RBs are possible, and still consistent with this invention.

[0109] In the examples and embodiments described herein, MCS may refer to the modulation and coding set, which may be used to signal to the WTRU the modulation order and a parameter that may be used to derive the TBS and/or the coding rate. The parameter may be, for example, I_TBS. The MCS is used in non-limiting examples. Other information may be substituted for MCS to signal to the WTRU the modulation order, the coding rate, and/or the TBS, and still be consistent with examples described herein.

[0110] In examples, FDM of multiple codewords in a TTI may be performed. In an example, two codewords may be assigned to the same spatial layer, and multiplexed in an FDM fashion, for example when a large amount of data needs to be transmitted to a node, which may require a large number of RBs to be assigned to that transmission. A large amount of data may need to be transmitted to a node in several examples, such as for DL from a base station to a WTRU, for UL from a WTRU to the base station, or for WTRU to WTRU links. In an example, the first codeword may be mapped in the frequency domain to the RBs at the partition-edge and may be configured to use a robust MCS. This may mitigate the SNR loss due to the inter-numerology interference. The second codeword assigned to the same WTRU or node may be mapped in the frequency domain to the RBs located toward the center of the numerology partition and may be configured to use a more aggressive MCS, which may help achieve higher throughput. The more aggressive MCS may include, for example higher order modulation, higher coding rate, and the like.

[0111] FIG. **8** is a diagram illustrating an example of FDM transmission of two codewords on a single layer. As shown in an example in diagram **800**, two adjacent partitions may use different numerologies. In this example, a first WTRU may be assigned data in a first partition **810** using a first numerology, and a second WTRU may be assigned data on a second partition **860** using a second numerology. At the boundary between the partitions **810**, **860**, the SINR may decrease. This decrease is shown in FIG. **8**, which shows frequency in the horizontal axis may be plotted against SINR in the horizontal axis, in a similar fashion to that shown in FIG. **3**. Such a plot may show that the resources closest to the partition edge on both sides of the partition have a lower SINR than resources further away from the partition edge. This SINR degradation is due to interference as a result of the numerology partition. For example, Codeword B **840** with an SINR curve **850** and Codeword C **880** with an SINR curve **855** may have lower SINRs than Codeword A **830** with an SINR curve **820** and Codeword D **890** with an SINR curve **870**. A similar plot, not shown, may be created with time plotted against SINR for the Codewords **830**, **840**, **880**, **890**. Such a plot may similarly show that the resources closer to the partition edge on both sides of the partition have a lower SINR than resources further away from the partition edge.

[0112] As shown in FIG. **8**, the first WTRU may be assigned Codeword B **840** that is mapped in the frequency domain to the RB adjacent to the partition boundary and uses a robust MCS selection. The robust MCS selection may be, for example, a low order modulation, such as QPSK, and a low coding rate. At the same time resources (such as in the same TTI), the first WTRU may also be assigned Codeword A **830** that is mapped in the frequency domain in the center of the partition and may use an aggressive MCS selection. The aggressive MCS selection may be, for example a higher modulation order, such as 16-QAM, 64-QAM or higher, and a high coding rate. Similarly, for the second WTRU, which may be assigned data using the second numerology, Codeword C **880** may be mapped close to the partition boundary, and may use a robust MCS selection. Codeword D **890** that may also be assigned to the second WTRU may be mapped closer to the center of the partition and may use a more aggressive MCS selection. Control channels may use a more robust MCS selection. For example, a first control channel may use control region resources in the first partition **825** and may use a more robust MCS selection. Also, a second control channel may use control region resources in the second partition **875** and may similarly use a more robust MCS selection.

[0113] In an example, the parameters of the second codeword may be derived from the parameters of the first codeword. For example, the WTRU may be semi-statically configured to use a certain number of RBs located in a certain part of the system bandwidth. The certain part of the system bandwidth may be, for example, 4 RBs at the band edge. These resources may be used for mapping the second codeword, and thus the base station may only need to signal the MCS for the second codeword, in addition to the control information for the first codeword.

[0114] In an example, some portions of a channel bandwidth may be allocated to re-transmissions of codewords that are not received successfully. For example, the edges of the channel partitions, where partitions may be configured to be used for the transmission of waveforms with different numerologies, may be allocated for re-transmissions. The size of the partition edge may be determined by a central controller, such as a base station, and signaled in a control channel, configured, or both. The size of the partition edge may be expressed in terms of Hertz (Hz), number of subcarriers, number of resource blocks, or another measure.

[0115] In another example, some portions of a channel bandwidth may be allocated to transmit additional bits of a codeword. The information bits of a data stream may be encoded and later processed by a rate matching operation which selects certain bits from the output of the channel encoder, where the selected bits may be further processed for transmission. One partition of a channel bandwidth may further be divided into two or more sub-partitions. For example, one or more of the edges of the partition may constitute a sub-partition. The number of bits at the output of the rate matching block may be decided based on the resources available in a subset of sub-partitions.

[0116] For some WTRUs, the rate matching process may be configured to produce additional bits where the additional bits may be transmitted in those resources of other sub-partitions. For example, if the channel bandwidth is divided into two partitions as shown in FIG. **8**, each partition may be further divided into two sub-partitions where one of the sub-partitions consists of resources at the edge of a partition. In an example, the edge of a partition may have N subcarriers while the remaining part has M subcarriers. The rate matching operation may be performed such that the number of bits at the output of the rate matching may fit into M subcarriers. In one method, the rate matching operation may output additional bits that may fit into N subcarriers.

[0117] In examples, a mixed Cell-Specific Reference Signal (CRS) and DMRS based transmission mode may be used. In a transmission with mixed numerology, the inter-numerology interference may impact the quality of transmission especially at the band edge, or partition edge, of a given service allocation where there is a transition from one numerology to another. The resulting interference may be mutual, however it may have a larger impact from the service with a larger subcarrier spacing on the service with a smaller subcarrier spacing.

[0118] FIG. **9** is a diagram illustrating an example of an interference model for the band-edge. As shown in an example in diagram **900**, there may be a band-edge or a partition-edge between two services. One way to compensate for the incurred loss at the band-edge may be to take advantage of WTRU-specific beamforming by employing DMRS-based beamforming on the band-edge regardless of the transmission mode in the remaining part of the band. The beamforming on the band-edge may be done by both services to minimize the interference **970**, **980** on the direction of the WTRU of the other service and maximizing the transmission efficiency for the service's own WTRU. FIG. **9** shows an example interference model for the case for two adjacent services, namely, S1 and S2 and having different subcarrier spacing.

[0119] For the example case shown in FIG. **9**, a transmit beamforming procedure can be devised as follows. A WTRU**1 910** and a WTRU**2 920** may perform channel measurements to provide implicit or explicit information. On channel response H_{11}, there may be a channel response for WTRU**1 910** for its desired service S_1. The desired service S_1 may be transmitted on a numerology 1. On channel response H_{21}, there may be a channel response for WTRU**1 910**, from the interference service S_2. Service S_2 may be transmitted on a numerology 2. On channel response H_{12}, there may be a channel response for WTRU**2 920**, from the interference service S_1, transmitted on numerology 1. On channel response H_{22}, there may be a channel response for WTRU**2 920** for its desired service S_2, transmitted on numerology 2. In some cases, it may be assumed that $H_1=H_{11}=H_{21}$ and $H_2=H_{12}=H_{22}$, for example when the difference between the subcarrier spacing is not large.

[0120] Using the measurements provided by the WTRUs, the base station may perform beamforming to: minimize the interference generated by the service Si to the other service, maximize the SNR of the intended transmission of service Si, minimize interference generated by service Si while constraining the SNR of the intended transmission of service Sj to be above a certain threshold, or maximize the intended transmission of service Si, while constraining the interference generated by service Sj to be below a certain threshold.

[0121] The base station may perform the beamforming to benefit both WTRUs, or, for example, to maximize the intended S_1 for WTRU**1 910** while minimizing the interference from S_2. Different beamforming mechanisms may be used, and an exemplary approach may be based on maximizing the signal-to-leakage-noise (SLNR) ratio,

$$SLNR_1 = \frac{\|H_1 w_1\|^2}{M_1 \sigma_1^2 + \|H_2 w_1\|^2} \qquad \text{Equation (1)}$$

where M_1, σ_1^2 and w_1 represent a number of antennas at the WTRU**1 910**, a noise variance and a beamforming vector used by S_1, respectively. The beamforming vector w_1 may be defined as

$$w_1 \propto \max.\ \text{eigenvector}((M_1\sigma_1^2 I + H_2^H H_2)^{-1} H_1^H H_1) \qquad \text{Equation (2)}$$

It should be noted that a similar solution for w_2 may be derived.

[0122] In another example, WTRU**1 910** may use receive beamforming to mitigate the impact of the interference on the band-edge. To design the receiver beamforming, WTRU**1 910** may require the direction of the interference created by the other S2. One way to estimate the spatial direction of the interference on S1 may be as follows. WTRU**1 910** may be configured to perform CSI-RS measurements on an inner subband immediately next to the band-edge. The base station may stop transmission on the band-edge of S1. WTRU**1 910** may now be configured to perform CSI-RS measurements on the band-edge of S1. WTRU**1 910** may compare the measurements from the first step against the measurements in the third step to estimate the direction of the beamforming vector intended for the adjacent interfering band.

[0123] In a further example, the WTRU may be configured to perform CSI-RS measurement on the band-edge. The WTRU may report the level of the observed interference to estimate the CQI.

[0124] In examples, power boosting for REs may be used. The power of the cell specific reference signals may be adjusted according to the selectivity and the quality of the channel to enable an accurate channel estimation. In LTE, the ratio between the CRS and data REs may be a cell specific parameter that can be changed to enable better channel estimation.

[0125] In a system with mixed numerology, the transmission of a system with a wider subcarrier spacing may have a larger impact on the performance of a system with a smaller subcarrier spacing, thereby causing interference on both data signals and reference signals. One way to reduce the impact of interference on the accuracy of channel estimation may be to introduce additional power offset settings for band-edge transmissions. Therefore, a WTRU may be configured to use different sets of power settings for demodulation of reference signals required for channel estimation. The power boosting for the reference signal may be applied on all the reference REs located on the band-edge. Therefore, a WTRU may be configured to use different sets of power settings for demodulation and proper use of reference REs located at the band-edge and inner RBs.

[0126] In another example, another way to reduce the impact of the interference, may be to apply a power offset for all the REs located in the RB or RBs of the band-edge. The increased allocated power for band-edge power boosting may be supported from the power of inner RBs that are not interfered by an adjacent service. Therefore, a WTRU may be configured to use different sets of power settings for demodulation of all REs located at the band-edge and inner RBs. In case of additional power boosting for reference signals, a WTRU may need to apply the additional power offset for demodulation of reference REs. The power boosting techniques are applicable to any node that is transmitting on a band partition with varying qualities, including the base station, WTRUs, and the like.

[0127] In examples, downlink synchronization to support mixed numerology and flexible channel bandwidth may be used. In a cellular system, synchronization signals are typically used for the WTRU to achieve frame, sub-frame, slot, and symbol synchronization, identify the center of the channel, and extract the physical (PHY) layer cell identity (ID). In LTE, there may be two types synchronization signals: a primary synchronization signal (PSS) and a secondary synchronization signal (SSS). The PSS may be used to achieve sub-frame, slot, and symbol synchronization in the time domain, identify the center of the channel bandwidth in the frequency domain, and deduce a pointer towards 1 of 3 Physical layer Cell Identities (PCI). The SSS may be used to achieve radio frame synchronization and deduce a pointer towards 1 of 168 Physical layer Cell Identity (PCI) groups. These synchronization signals may be placed in a set of resource elements that are at the center of the channels with certain rate.

[0128] Systems that are capable of deploying different OFDM numerologies may require synchronization with some of the WTRUs in the network and, therefore, a synchronization signal (SS) and corresponding mechanisms. Since the SS may be used by WTRUs with mixed numerology capability, it would be desirable to use one of the numerologies, which may be referred to as a common numerology, for the SS. The resources that carry the SS could also carry other signals that need to be broadcast to all, or a group of, WTRUs. The other signals may include, for example, cell specific reference signals. The common numerology may also carry WTRU specific signals for reliable transmission and reception.

[0129] FIGS. **10**A and **10**B are signaling diagrams illustrating examples of the placement of synchronization signals in a mixed numerology time-frequency grid. Examples in signaling diagram **1000** are shown on a grid with frequency in the horizontal axis, time in the vertical axis and a frequency center of the channel shown by fc. Specifically, examples in FIGS. **10**A and **10** B show two possible ways to allocate the resources for signals, including PSS and SSS, using a common numerology and its coexistence with other numerologies in a channel. Although only two other numerologies with symmetric allocation patterns are shown, there may be many different numerologies and patterns in general.

[0130] As shown in an example in FIG. **10**A, a first numerology **1010**A may be used by a first group of WTRUs in a first part of a channel bandwidth and a second numerology **1030**A may be used by a second group of WTRUs in a second part of the channel bandwidth. In an example, the first numerology **1010**A may be used by URLLC WTRUs and the second numerology **1030**A may be used by mMTC WTRUs. A common numerology **1020**A may be used by an SSS **1050**A and a PSS **1060**A. In an example, the common numerology **1020**A may be used in a third part of the channel bandwidth between the first part of a channel bandwidth and the second part of a channel bandwidth. In an example, the common numerology **1020**A may be the same numerology as one of the first numerology **1010**A and the second numerology **1030**A. In another example, the common numerology **1020**A may be a third numerology and may be different from the first numerology **1010**A and the second numerology **1030**A. In an example, the common numerology **1020**A may be a fixed numerology. Further, the common numerology **1020**A may be independent of the first numerology **1010**A and the second numerology **1030**A.

[0131] As shown in an example in FIG. **10**B and similarly to the example shown in FIG. **10**A, a first numerology **1010**B may be used by a first group of WTRUs in a first part of a channel bandwidth and a second numerology **1030**B may be used by a second group of WTRUs in a second part of the channel bandwidth. In an example, the first numerology **1010**B may be used by URLLC WTRUs and the second numerology **1030**B may be used by mMTC WTRUs. A common numerology **1020**B may be used by an SSS **1050**B and a PSS **1060**B. In an example, the common numerology **1020**B may be used across the channel bandwidth, and in time resources between time resources used for the first numerology **1010**B and the second numerology **1030**B. In an example, the common numerology **1020**B may be the same numerology as one of the first numerology **1010**B and the second numerology **1030**B. In another example, the common numerology **1020**B may be a third numerology and may be different from the first numerology **1010**B and the second numerology **1030**B. In an example, the common numerology **1020**B may be a fixed numerology. Further, the common numerology **1020**B may be independent of the first numerology **1010**B and the second numerology **1030**B.

[0132] For some scenarios, such as wide bandwidth scenarios, there may be multiple common numerology regions, for example, to carry one or more system signals. The common numerology may be used in a common numerology region. Examples of system signals include synchronization signals, broadcast signals, and the like. The location of the common numerology regions may be a function of the system bandwidth (for example, 200 megahertz (MHz), up to 1 gigahertz (GHz) or 2 GHz) and/or the frequency band (for example, the 28 GHz band). In an example, the common numerology regions may be equally spaced throughout the system bandwidth. The spacing and/or the number of common numerology regions may be a function of the system bandwidth and/or the frequency band.

[0133] When a WTRU searches for a cell, the WTRU may search according to a frequency raster (for example, 200 kHz for LTE). The frequency raster may be a function of the frequency band. The location of the common numerology regions may be a function of the frequency raster.

[0134] Examples of WTRUs which may or may not use multiple numerologies include low cost IoT devices. If some WTRUs in the network cannot use multiple numerologies then the base station may transmit numerology specific synchronization signals, which are allocated in the time-frequency grid in a similar manner as the ones shown in FIGS. **10**A and **10**B. The specific location of those SSs may be signaled from higher layers, in a static or dynamic way, so that those WTRUs can know where to find the SSs.

[0135] In examples, uplink control channel mappings for mixed numerology systems may be used. Since the PUCCH resources may be mapped to the edges of the component carrier bandwidth, use of a mixed numerology may adversely impact PUCCH transmissions. The format of the PUCCH transmission, such as, for example, PUCCH Format 1 versus PUCCH Format 2, may be utilized to determine the degree of robustness imparted for the transmission.

[0136] For example, PUCCH Format 2 (used for channel state reports) may be transmitted closest to the edges of the uplink bandwidth, whereas PUCCH Format 1 (used for HARQ reporting and scheduling requests) may be mapped next. Since PUCCH Format 2 is mapped to resources closest

to the band edges, these transmissions may have a greater susceptibility to interference from the adjacent numerology.

[0137] One way to improve PUCCH performance may be to utilize multiple antenna transmit diversity when the WTRU has multiple transmit antennas. In such a case, the WTRU may transmit the PUCCH using different frequency resources from the different antennas. The WTRU may therefore improve PUCCH performance, albeit at the cost of using an increased number of resources. The additional resources used need not be limited to the frequency domain only, as in this example, but may also be extended to include additional resources in the time domain as well.

[0138] Another example by which to achieve higher robustness may be to lower the coding rate of the control information transmitted in the partition-edge regions. In one example, control information may be spread over more subcarriers when transmitted on the band edges or partition edges. In another example, control information may be repeated when transmitted on the band edges or partition edges.

[0139] Another example may include transmitting the control information on resources that are not mapped to the band edges or partition edges. For example, if OFDM is used for the uplink transmission, a WTRU may transmit its control information within its resources that were allocated by a central controller. If the WTRU is not allocated any resources, the control information may be transmitted on a reserved set of resources. If a single carrier waveform, such as DFT-s-OFDM, is used for the uplink transmission, a set of resources away from the band edges may be reserved for control channel transmission. One example by which to indicate the set of resources allocated may include signaling the allocation to the WTRUs.

[0140] FIG. **11** is a diagram illustrating an example of control channel allocation. In an example shown in diagram **1100**, the number of subcarriers or number of groups of subcarriers that may be excluded from being used for control information transmission may be signaled. In examples, the size of a group of subcarriers may be pre-determined or defined.

[0141] As shown in FIG. **11**, a first partition **1110** may be used for a first numerology and a second partition **1160** may be used for a second numerology. In a control region, resources **1120** in the first partition **1110** may be used for a first control channel and resources **1170** in the second partition **1160** may be used for a second control channel. Codeword A **1130** and Codeword B **1140** may be transmitted in the data region in the first partition **1110**, and Codeword C **1180** and Codeword D **1190** may be transmitted in the data region in the second partition **1160**. Resources **1150** may be not used for the control channel.

[0142] In an example, k1 subcarriers in the first partition **1110** and k2 subcarriers in the second partition **1160** may be excluded from being used for the control channel. In other words, k1 subcarriers and k2 subcarriers in resources **1150** may be excluded from being used for the control channel. One of ordinary skill in the art will appreciate that in this example, the partitions may not have edges next to other partitions on the left and right sides, respectively. Therefore, subcarriers in those sides may not need to be excluded from being used for the control channel. However, in general, subcarriers on both sides of the partition may be excluded.

[0143] The number of subcarriers k1 and k2 may be signaled by a central controller at the time partition set up or configured semi-statically. In an example, only k1, k2, or another value may be signaled or configured and the corresponding other values may be computed from the signaled value. For example, 180 MHz of spectrum may be excluded from control channel transmissions. The WTRU may compute that 180 MHz corresponds to 12 subcarriers in a partition with 15 KHz subcarrier spacing and 36 subcarriers in a partition with 5 kHz subcarrier spacing. The excluded subcarriers may be used for the transmission of user data or other less critical signals. For example, k1 subcarriers in resources **1120**, k2 subcarriers in resources **1150** may be used for the transmission of user data or other less critical signals.

[0144] In examples, methods by which to mitigate uneven SINR distribution in the time domain across a sub-frame/TTI may be used. In some scenarios, the SINR may be distributed unevenly in the time domain across a sub-frame or a TTI. These scenarios may include, but may not be limited to, the operation in frequency selective channel when there are transitions from DTX (no transmission) to transmitting data, or when frequency hopping is used. In these cases, the first (or first few) symbols of the transmission after the discontinuity may be impacted by interference, and the SINR may be lower at the beginning of the sub-frame/TTI than for the rest of the sub-frame/TTI.

[0145] FIG. **12** is a diagram illustrating example methods for uneven time domain SINR distribution. In an example shown in diagram **1200**, transitions and/or discontinuities in TTI1 and TTI3 may result in reduced SINR or SINR degradation in the areas **1250** at the beginning of the TTI/sub-frame. In an example, the first (or the first few) OFDM, DFT-s-OFDM, or unique word (UW)/zero tail (ZT) DFT-s-OFDM symbols **1210** of the sub-frame/TTI may be configured to use a lower modulation order. This may mitigate the SINR loss of the first OFDM symbols **1210**. The rest of the OFDM/DFT-s-OFDM symbols **1260** of the sub-frame/TTI may be configured for a higher modulation order.

[0146] FIG. **13** is a diagram illustrating example methods for uneven time domain SINR distribution per RB. In an example shown in diagram **1300**, the first (one or a few) OFDM symbols **1310** of the sub-frame may use a low order modulation, such as Binary Phase Shift Keying (BPSK) or QPSK, while the remaining symbols **1360** may use 16-QAM, 64-QAM or higher. Examples are shown in FIG. **13** for one resource block (RB).

[0147] FIG. **14** is a diagram illustrating example methods for uneven time and frequency domain SINR distribution with a plurality of RBs. In an example shown in diagram **1400**, when an RB may be allocated in the closer to a partition edge, the REs **1410** in an RB that may be closer to the discontinuity of the partition edge, both in the time domain and in the frequency domain, may be allocated a lower modulation order. As shown in FIG. **14**, a partition edge **1430** may be in the frequency domain and a partition edge **1440** may be in the time domain. In examples, the partition edge may be the band edge in the frequency domain. For example, partition edge **1430** may be a band edge. The remaining REs **1460** may be allocated a higher modulation order.

[0148] Although features and elements are described above in particular combinations, one of ordinary skill in the art will appreciate that each feature or element can be used alone or in any combination with the other features and elements. In addition, the methods described herein may be

implemented in a computer program, software, or firmware incorporated in a computer-readable medium for execution by a computer or processor. Examples of computer-readable media include electronic signals (transmitted over wired or wireless connections) and computer-readable storage media. Examples of computer-readable storage media include, but are not limited to, a read only memory (ROM), a random access memory (RAM), a register, cache memory, semiconductor memory devices, magnetic media such as internal hard disks and removable disks, magneto-optical media, and optical media such as CD-ROM disks, and digital versatile disks (DVDs). A processor in association with software may be used to implement a radio frequency transceiver for use in a WTRU, UE, terminal, base station, RNC, or any host computer.

What is claimed is:

1. A method for use in a wireless transmit/receive unit (WTRU), the method comprising:

mapping a first set of bits in a first codeword to a higher order modulation scheme and a second set of bits in the first codeword to a lower order modulation scheme;

transmitting the first set of bits in the first codeword at a first allocated power; and

transmitting the second set of bits in the first codeword at a second allocated power.

2. The method of claim **1**, wherein the second allocated power is greater than the first allocated power.

3. The method of claim **1**, further comprising:

determining the second allocated power based on power boosting the first allocated power.

4. The method of claim **1**, further comprising:

receiving an assignment message from a base station including instructions regarding partition determination and resource assignment; and

determining at least two partitions of bandwidth for wireless communication based on the assignment message, wherein each of the at least two partitions has differing symbol periods, differing subcarrier spacing or both.

5. The method of the claim **4**, further comprising:

assigning resource blocks (RBs) of the at least two partitions based on the assignment message, wherein RBs of a partition closer in at least one of time resources and frequency resources to an adjacent partition are assigned the lower modulation scheme, and wherein the first codeword is transmitted using assigned RBs.

6. The method of claim **4**, wherein a first partition has a first numerology and a second partition has a second numerology.

7. The method of claim **1**, further comprising:

determining that data of the first codeword is to be re-transmitted on a second codeword, wherein the second codeword contains the same number of bits as the first codeword; and

transmitting the second codeword.

8. The method of claim **7**, wherein the mapping of the bits of the first codeword and a mapping of the bits of the second codeword is based on at least one of pre-defined processing.

9. The method of claim **7**, wherein the mapping of the bits of the first codeword and a mapping of the bits of the second codeword is based on dynamically signaled processing.

10. The method of claim **7**, wherein the mapping of the bits of the first codeword and a mapping of the bits of the second codeword is based on processing signaled in downlink control information (DCI).

11. A wireless transmit/receive unit (WTRU) for use with mixed numerologies, the WTRU comprising:

a processor; and

a transceiver operatively coupled to the processor; wherein:

the processor is configured to map a first set of bits in a first codeword to a higher order modulation scheme and a second set of bits in the first codeword to a lower order modulation scheme;

the transceiver and the processor are configured to transmit the first set of bits in the first codeword at a first allocated power; and

the transceiver and the processor are configured to transmit the second set of bits in the second codeword at a second allocated power.

12. The WTRU of claim **11**, wherein the second allocated power is greater than the first allocated power.

13. The WTRU of claim **11**, wherein the processor is further configured to determine the second allocated power based on power boosting the first allocated power.

14. The WTRU of claim **11**, wherein the transceiver is further configured to receive an assignment message from a base station including instructions regarding partition determination and resource assignment; and

wherein the processor is further configured to determine at least two partitions of bandwidth for wireless communication based on the assignment message, wherein each of the at least two partitions has differing symbol periods, differing subcarrier spacing or both.

15. The WTRU of the claim **14**, wherein the processor is further configured to assign resource blocks (RBs) of the at least two partitions based on the assignment message, wherein RBs of a partition closer in at least one of time resources and frequency resources to an adjacent partition are assigned the lower modulation scheme, and wherein the first codeword is transmitted using assigned RBs.

16. The WTRU of claim **14**, wherein a first partition has a first numerology and a second partition has a second numerology.

17. The WTRU of claim **11**, wherein the processor is further configured to determine that data of the first codeword is to be re-transmitted on a second codeword, wherein the second codeword contains the same number of bits as the first codeword; and

wherein the transceiver and the processor are further configured to transmit the second codeword.

18. The WTRU of claim **17**, wherein the mapping of the bits of the first codeword and a mapping of the bits of the second codeword is based on at least one of pre-defined processing.

19. The WTRU of claim **17**, wherein the mapping of the bits of the first codeword and a mapping of the bits of the second codeword is based on dynamically signaled processing.

20. The WTRU of claim **17**, wherein the mapping of the bits of the first codeword and a mapping of the bits of the second codeword is based on processing signaled in downlink control information (DCI).

* * * * *