US 20200236735A1

(19) **United States**

(12) **Patent Application Publication** (10) **Pub. No.: US 2020/0236735 A1**

LEE et al. (43) **Pub. Date: Jul. 23, 2020**

(54) **VIRTUALIZED WIRELESS MESH NETWORK**

(71) Applicant: **DALI SYSTEMS CO. LTD.**, George Town (KY)

(72) Inventors: **Albert S. LEE**, Vancouver (CA); **Shawn Patrick STAPLETON**, Vancouver (CA); **Paul LEMSON**, Woodinville, WA (US); **Gary SPEDALIERE**, Minneapolis, MN (US)

(21) Appl. No.: **16/789,644**

(22) Filed: **Feb. 13, 2020**

Related U.S. Application Data

(63) Continuation of application No. 15/857,356, filed on Dec. 28, 2017, which is a continuation of application No. 13/670,290, filed on Nov. 6, 2012, now Pat. No. 10,264,626.

(60) Provisional application No. 61/556,715, filed on Nov. 7, 2011.

Publication Classification

(51) **Int. Cl.**

H04W 84/04	(2006.01)
H04W 88/08	(2006.01)
H04W 4/70	(2006.01)

(52) **U.S. Cl.**

CPC ***H04W 84/042*** (2013.01); ***H04W 88/085*** (2013.01); *H04W 4/90* (2018.02); *H04W 88/08* (2013.01); *H04W 84/047* (2013.01); ***H04W 4/70*** (2018.02)

(57) **ABSTRACT**

According to an embodiment of the present invention, a network is provided. The network may include a first base transceiver station (BTS). The first BTS may be operable to provide a first signal including a plurality of first carriers. The network may also include a second BTS operable to provide a second signal including a plurality of second carriers. The network may also include a set of one or more digital access units (DAUs), each of the one or more DAUs being coupled to at least one of the first BTS or the second BTS. A set of one or more digital remote units (DRUs) may be included in the network, each of the DRUs being coupled to one of the one or more DAUs and operable to broadcast the first signal or the second signal.

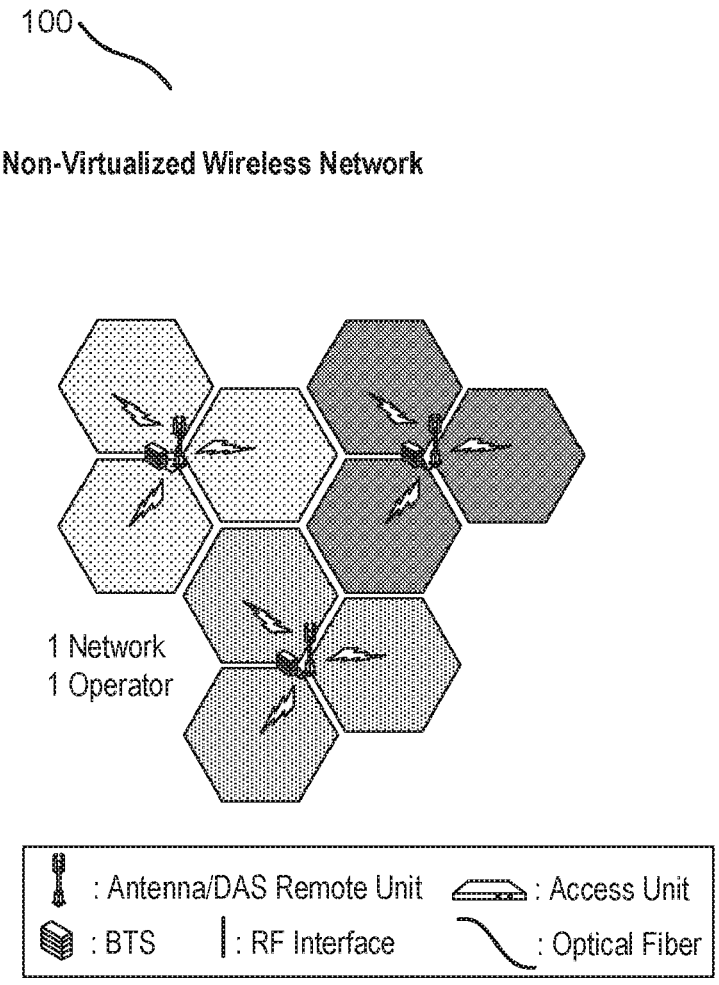

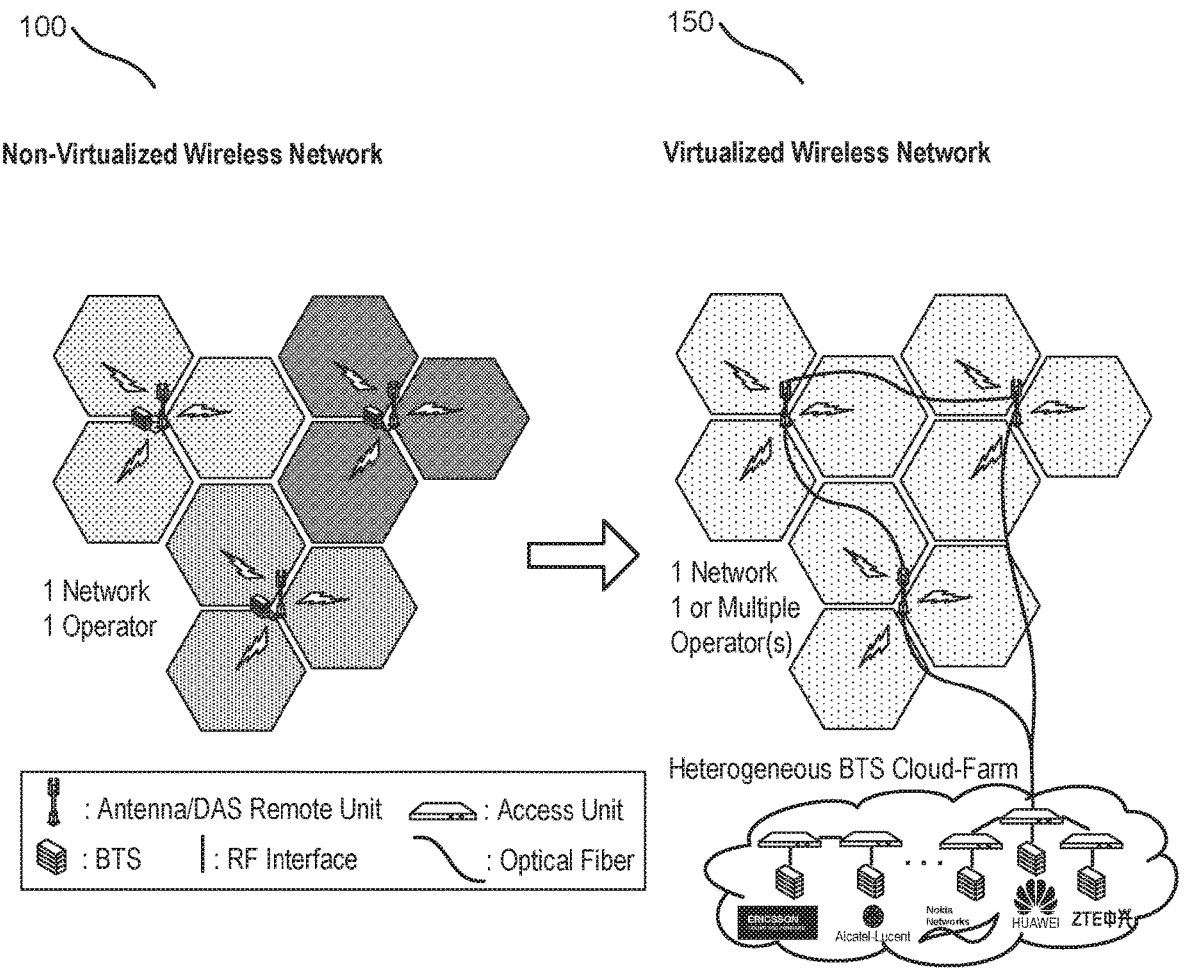
100
Non-Virtualized Wireless Network
1 Network
1 Operator
: Antenna/DAS Remote Unit
: Access Unit
: BTS
: RF Interface
: Optical Fiber
150
Virtualized Wireless Network
1 Network
1 or Multiple
Operator(s)
Heterogeneous BTS Cloud-Farm
ERICSSON
Alcatel-Lucent
Nokia Networks
HUAWEI
ZTE中兴

FIG. 1A

FIG. 1B

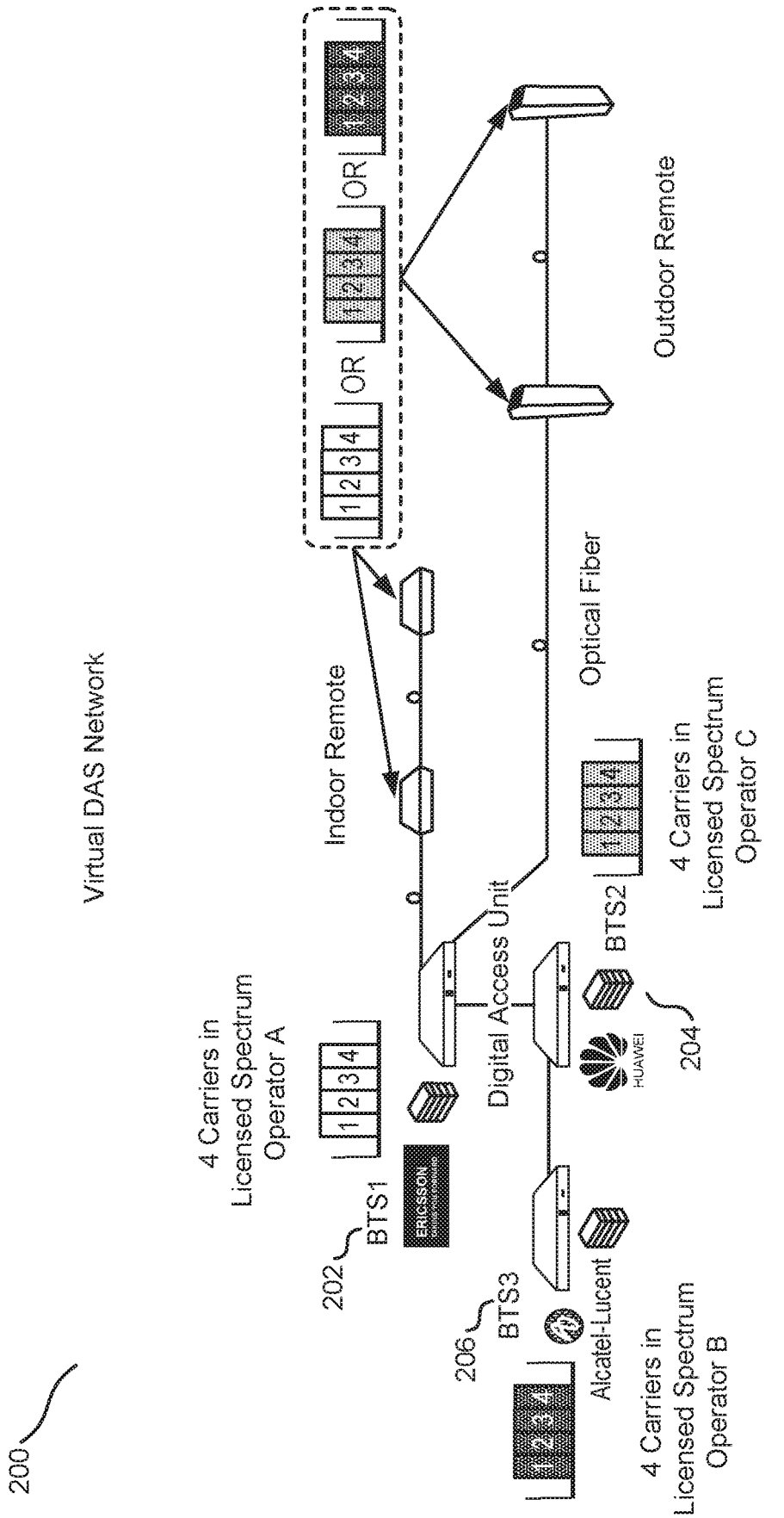
200
Virtual DAS Network
4 Carriers in Licensed Spectrum Operator A
202
BTS1
ERICSSON
4 Carriers in Licensed Spectrum Operator B
206
BTS3
Alcatel-Lucent
Indoor Remote
OR
OR
Digital Access Unit
Optical Fiber
Outdoor Remote
BTS2
HUAWEI
204
4 Carriers in Licensed Spectrum Operator C

FIG. 2

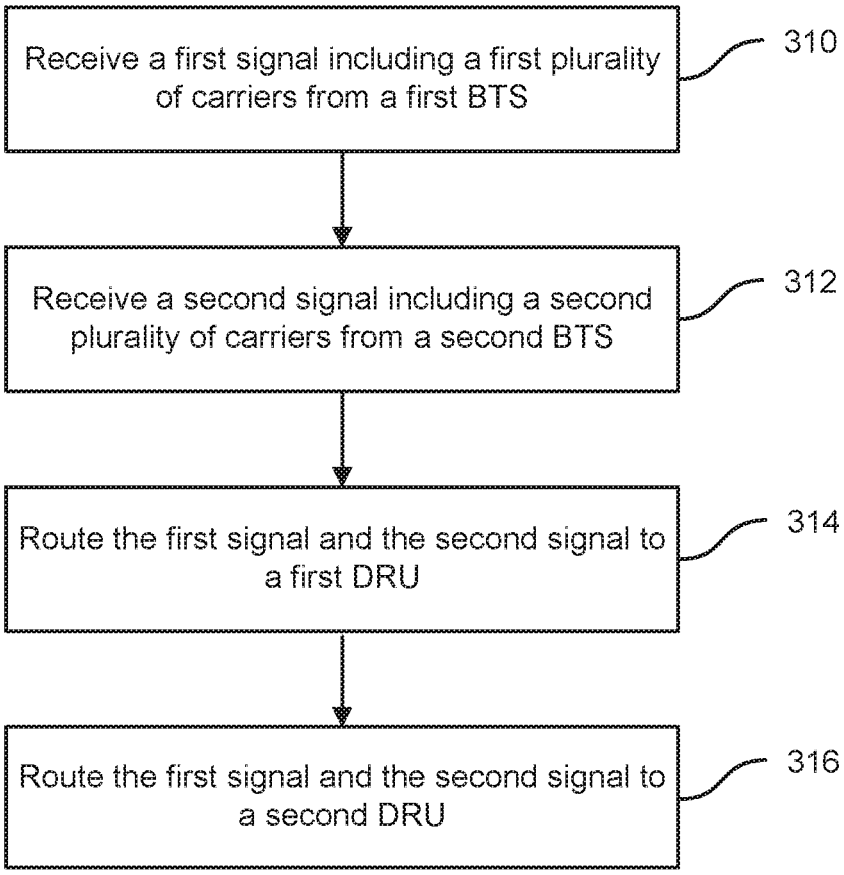
Receive a first signal including a first plurality of carriers from a first BTS
310
Receive a second signal including a second plurality of carriers from a second BTS
312
Route the first signal and the second signal to a first DRU
314
Route the first signal and the second signal to a second DRU
316

FIG. 3

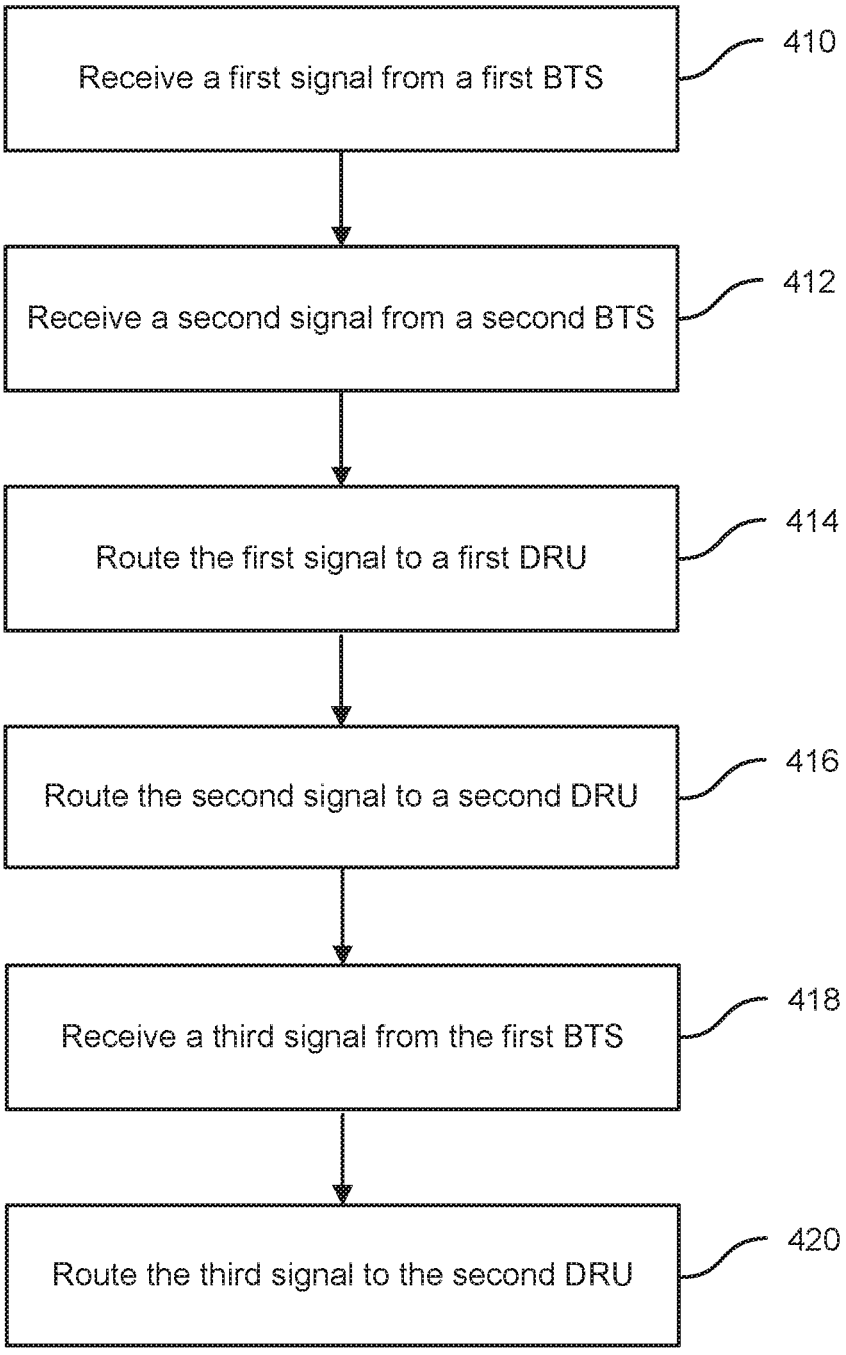
Receive a first signal from a first BTS
410
Receive a second signal from a second BTS
412
Route the first signal to a first DRU
414
Route the second signal to a second DRU
416
Receive a third signal from the first BTS
418
Route the third signal to the second DRU
420

FIG. 4

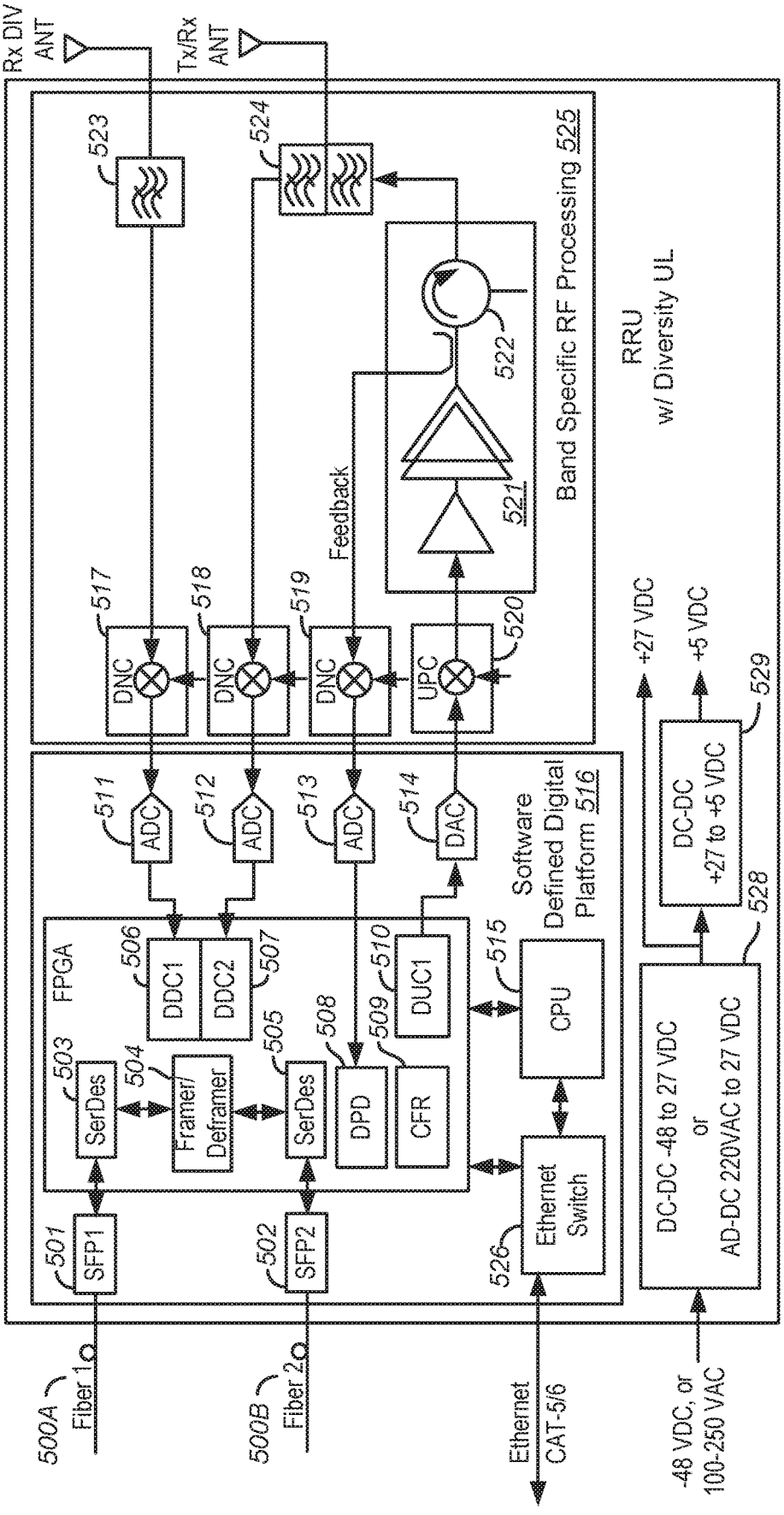

FIG. 5
Remote Radio Head Unit

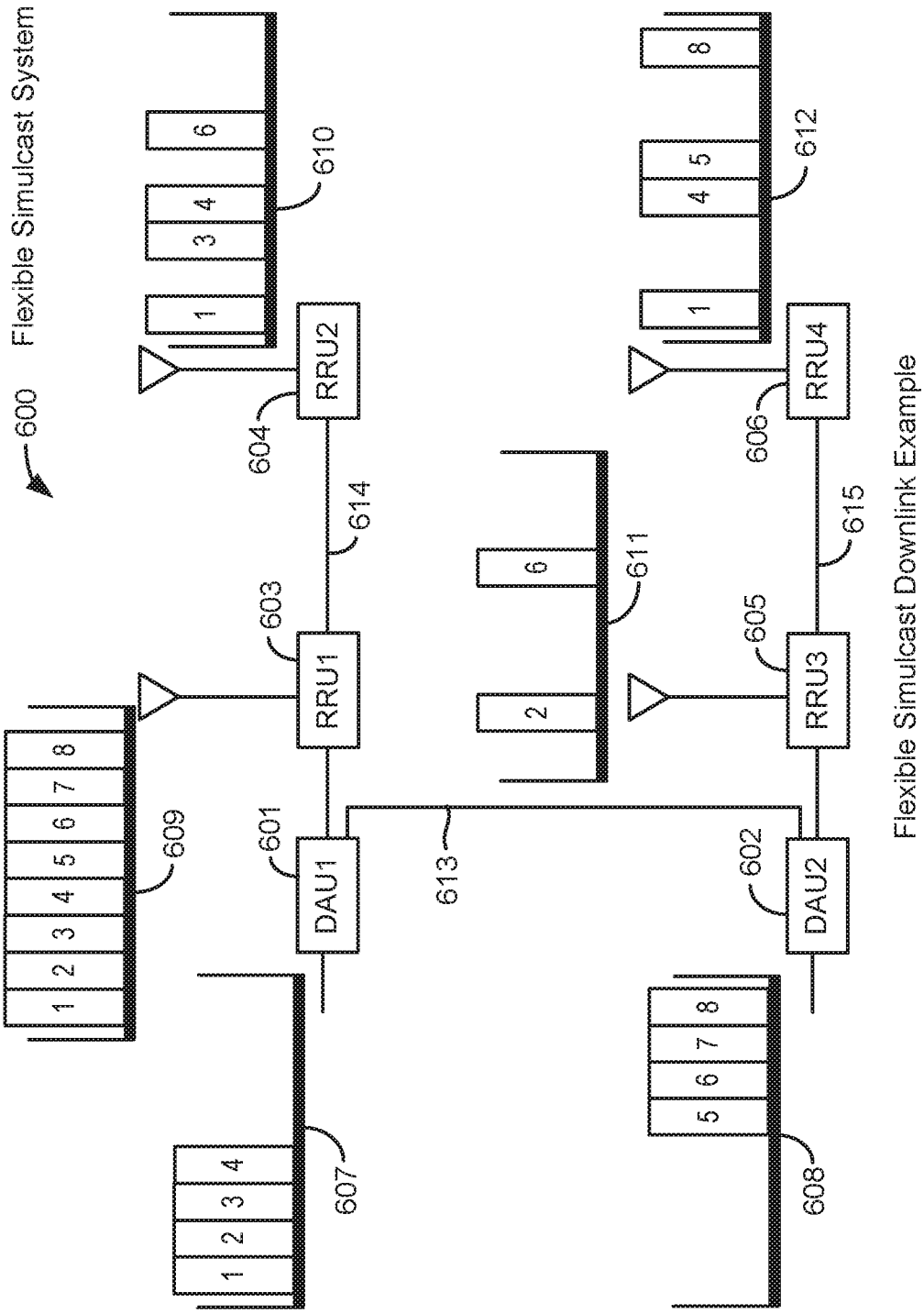
600
Flexible Simulcast System
RRU1
RRU2
RRU3
RRU4
DAU1
DAU2
601
602
603
604
605
606
607
608
609
610
611
612
613
614
615
1 2 3 4 5 6 7 8
1 2 3 4
5 6 7 8
1 2 3 4 6
1 4 5 8
2 6
Flexible Simulcast Downlink Example

FIG. 6

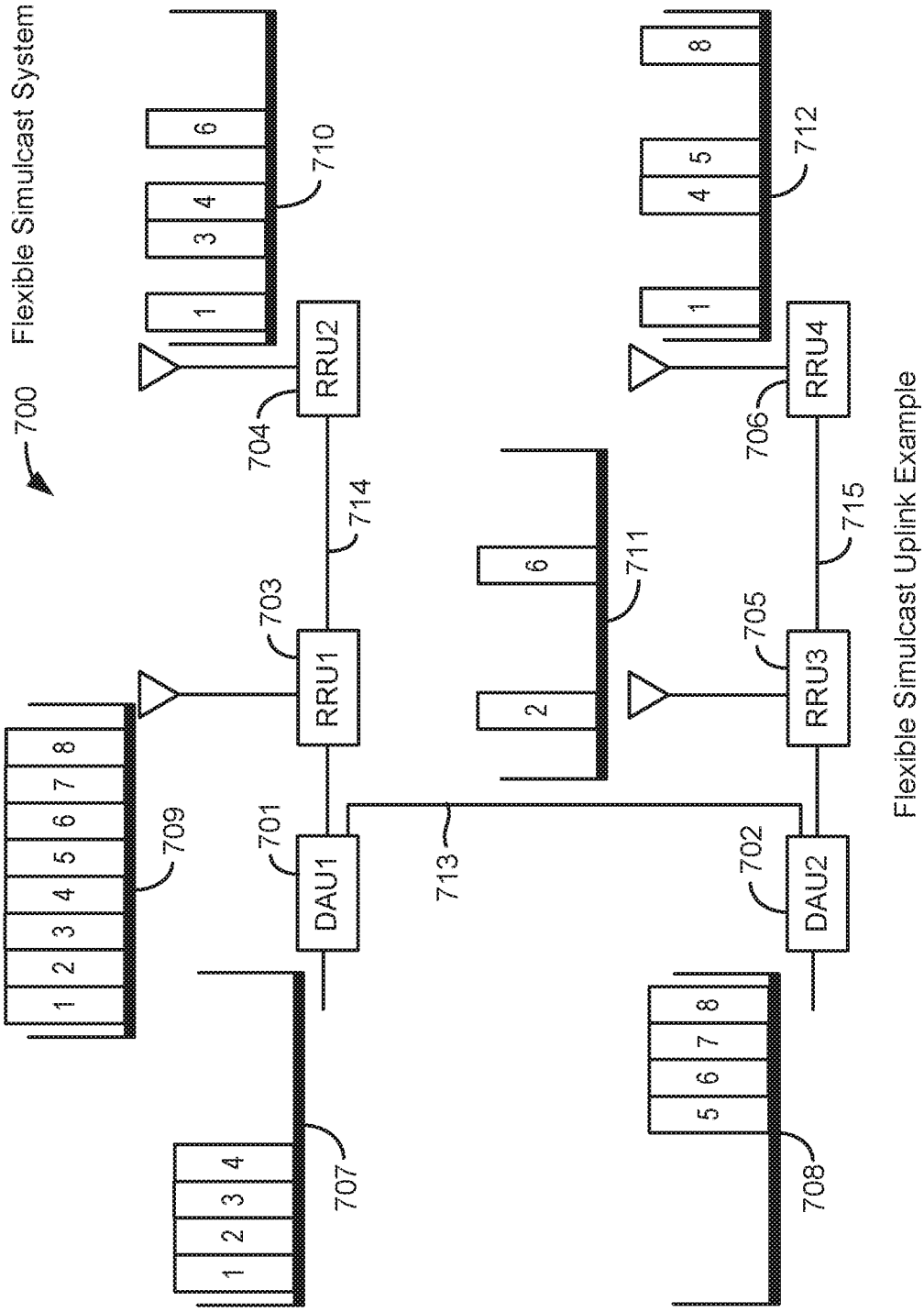

Flexible Simulcast Uplink Example

FIG. 7

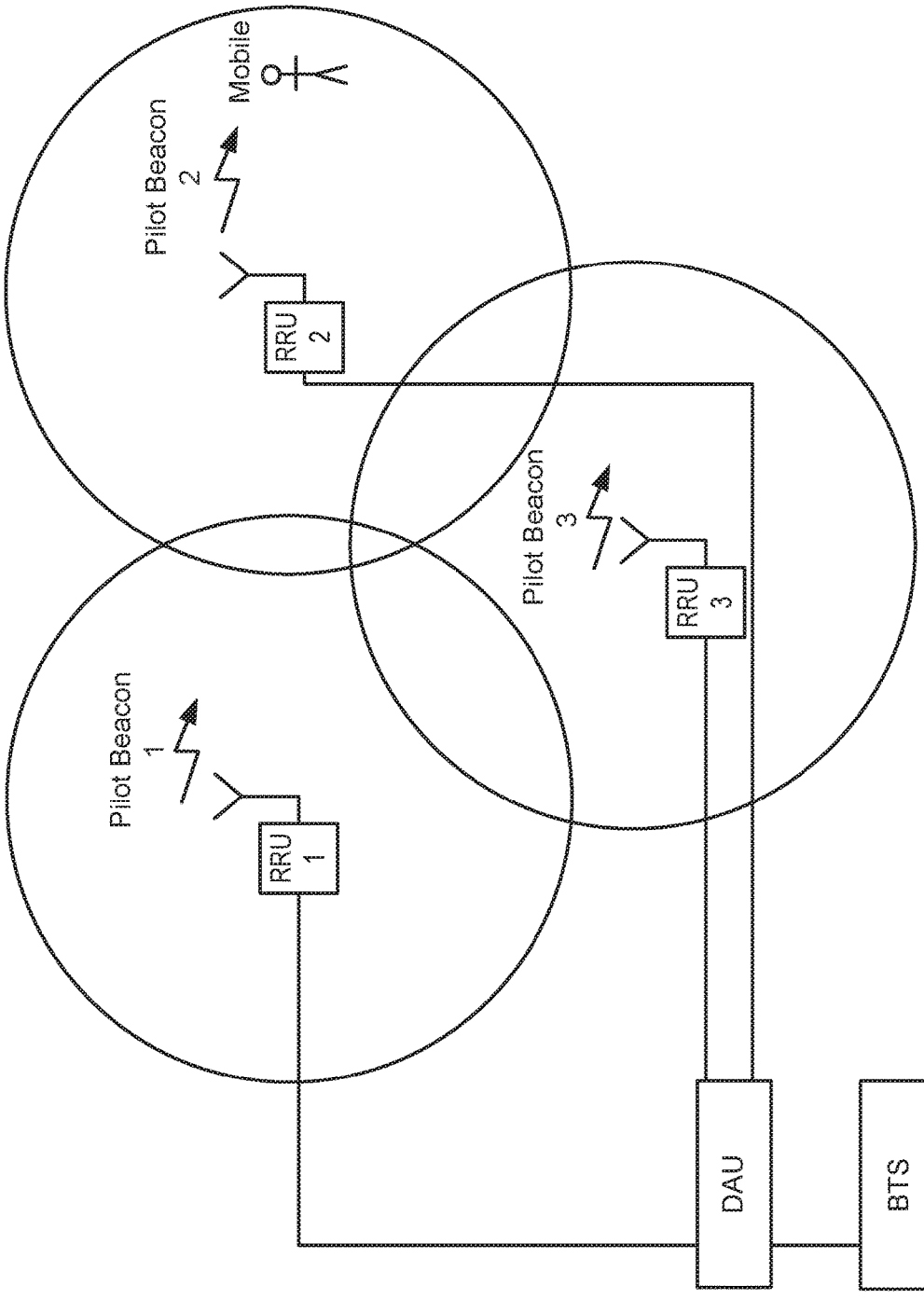

Pilot Beacon Indoor Localization System for CDMA and WCDMA

FIG. 8

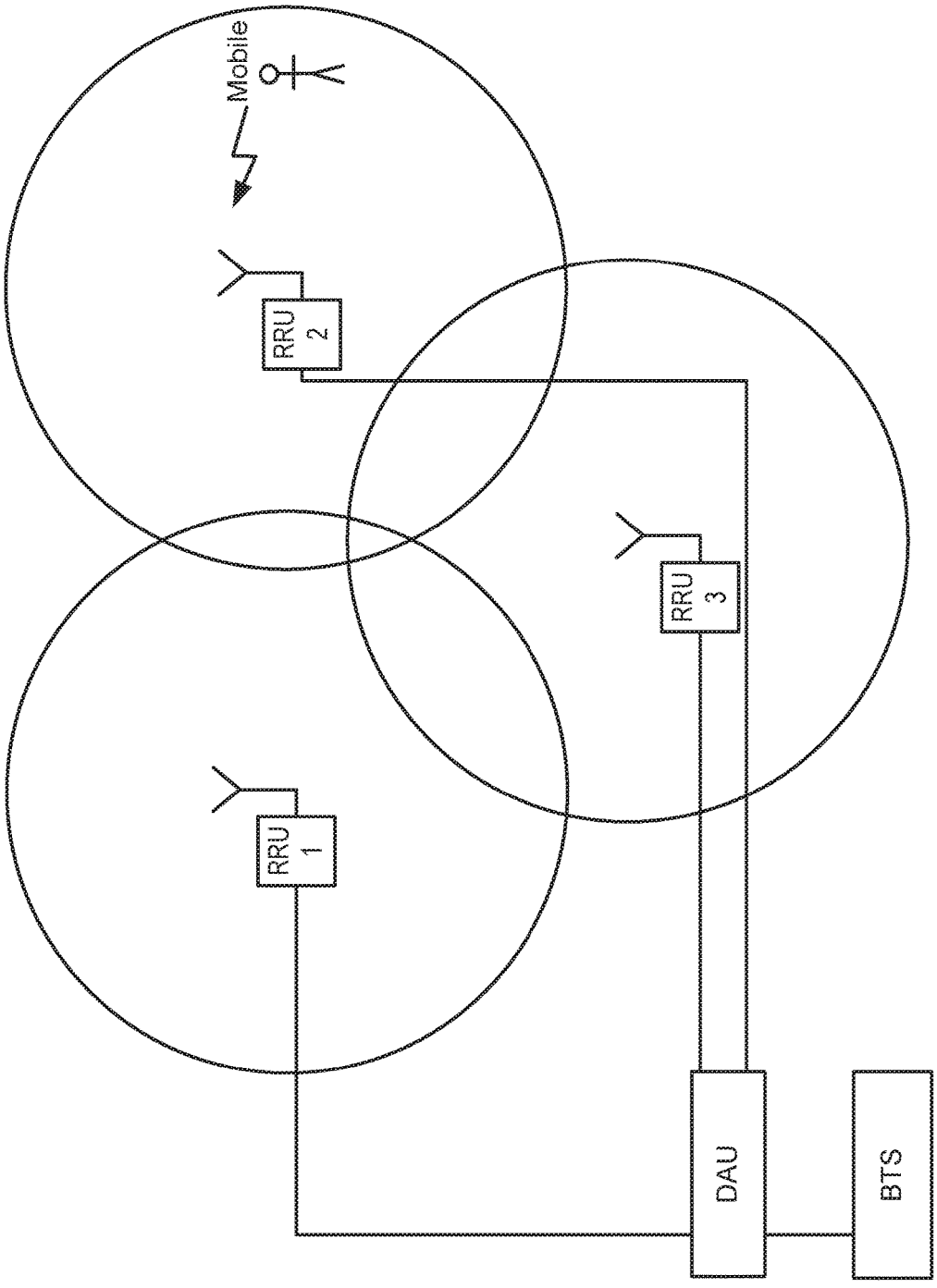

Indoor Localization System of GSM and LTE

FIG. 9

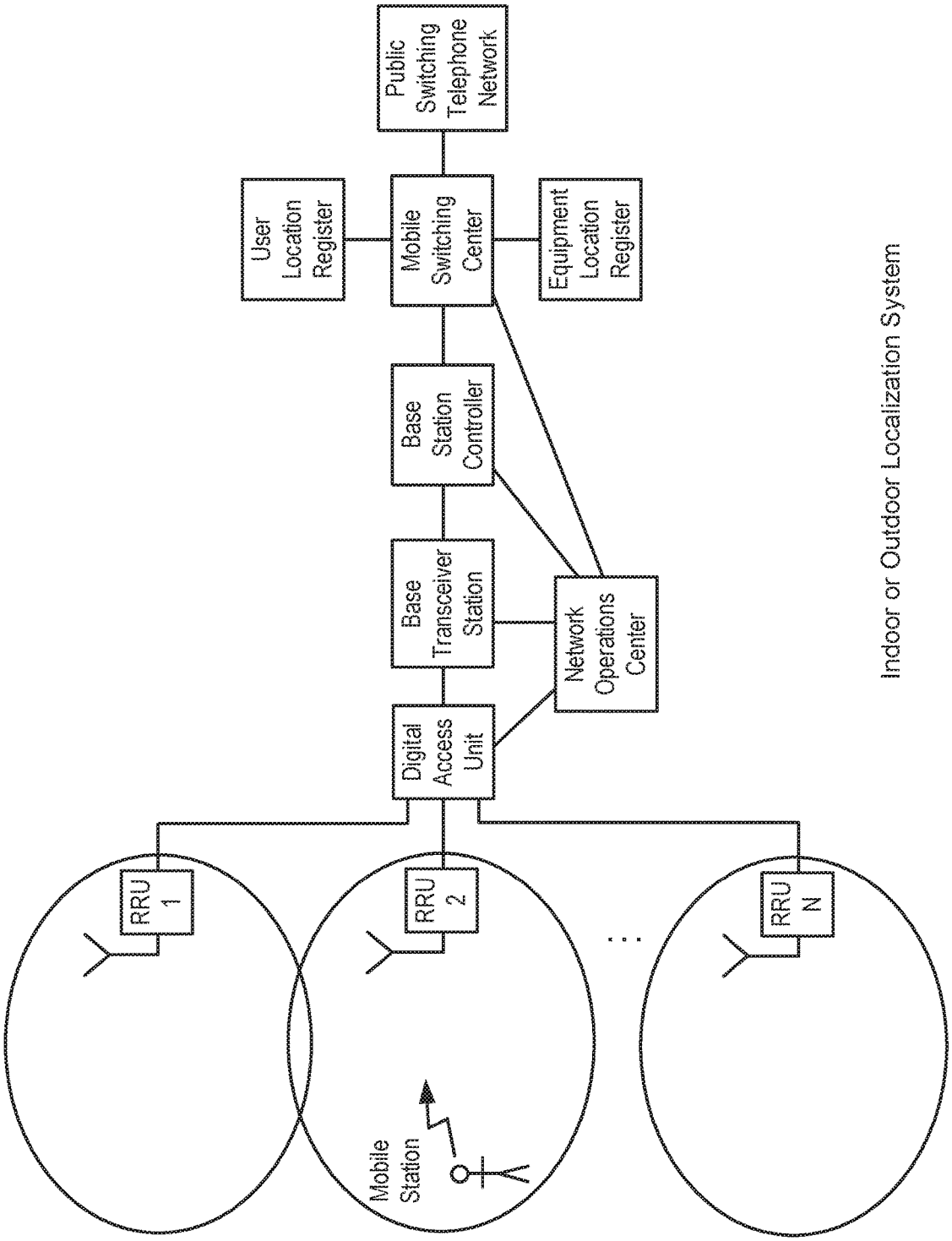
Public Switching Telephone Network
User Location Register
Mobile Switching Center
Equipment Location Register
Base Station Controller
Base Transceiver Station
Network Operations Center
Digital Access Unit
RRU 1
RRU 2
RRU N
Mobile Station
Indoor or Outdoor Localization System

FIG. 10

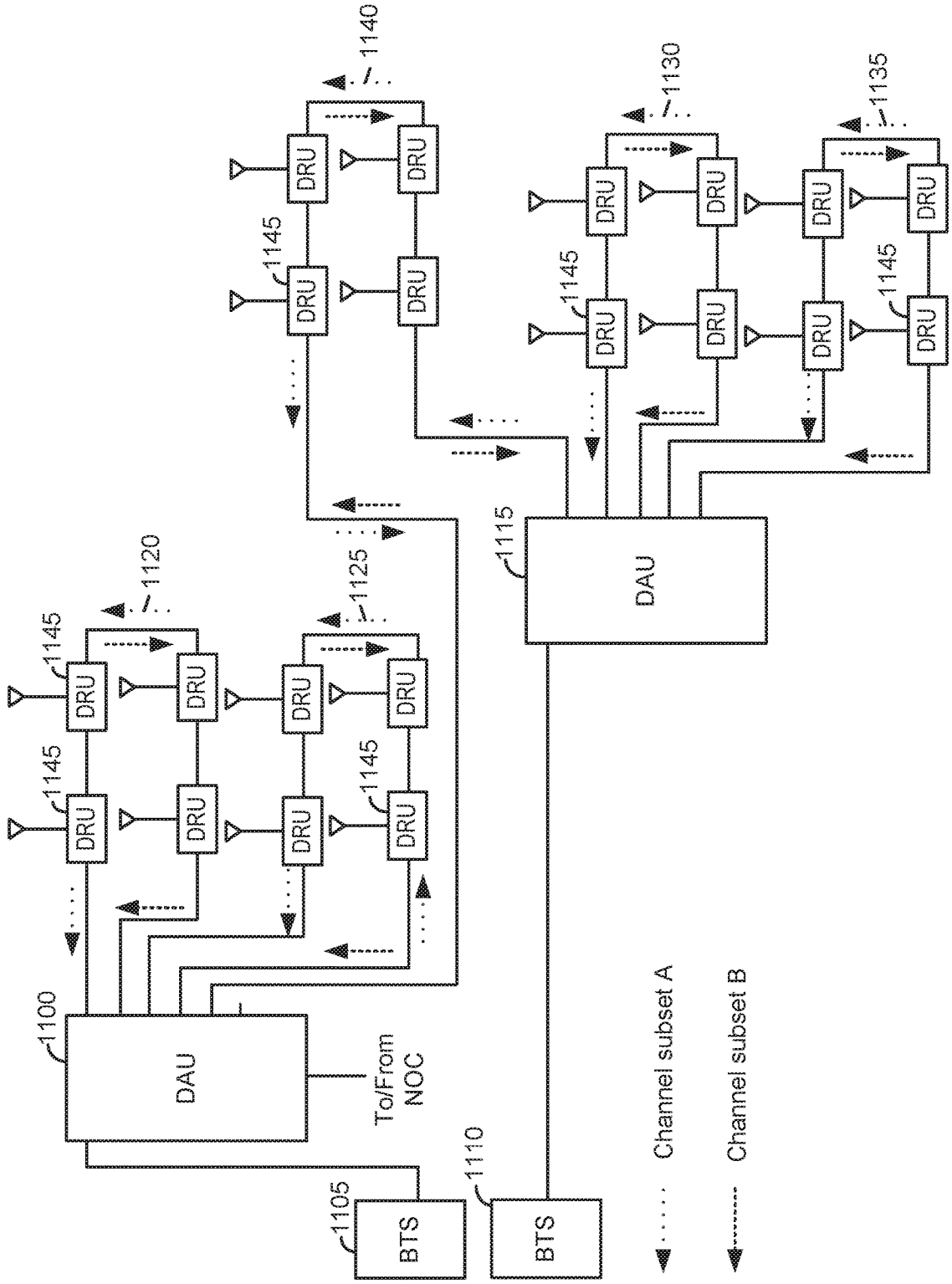
1100
DAU
To/From NOC
1105
BTS
1110
BTS
1115
DAU
1120
1125
1130
1135
1140
1145
DRU
Channel subset A
Channel subset B

FIG. 11

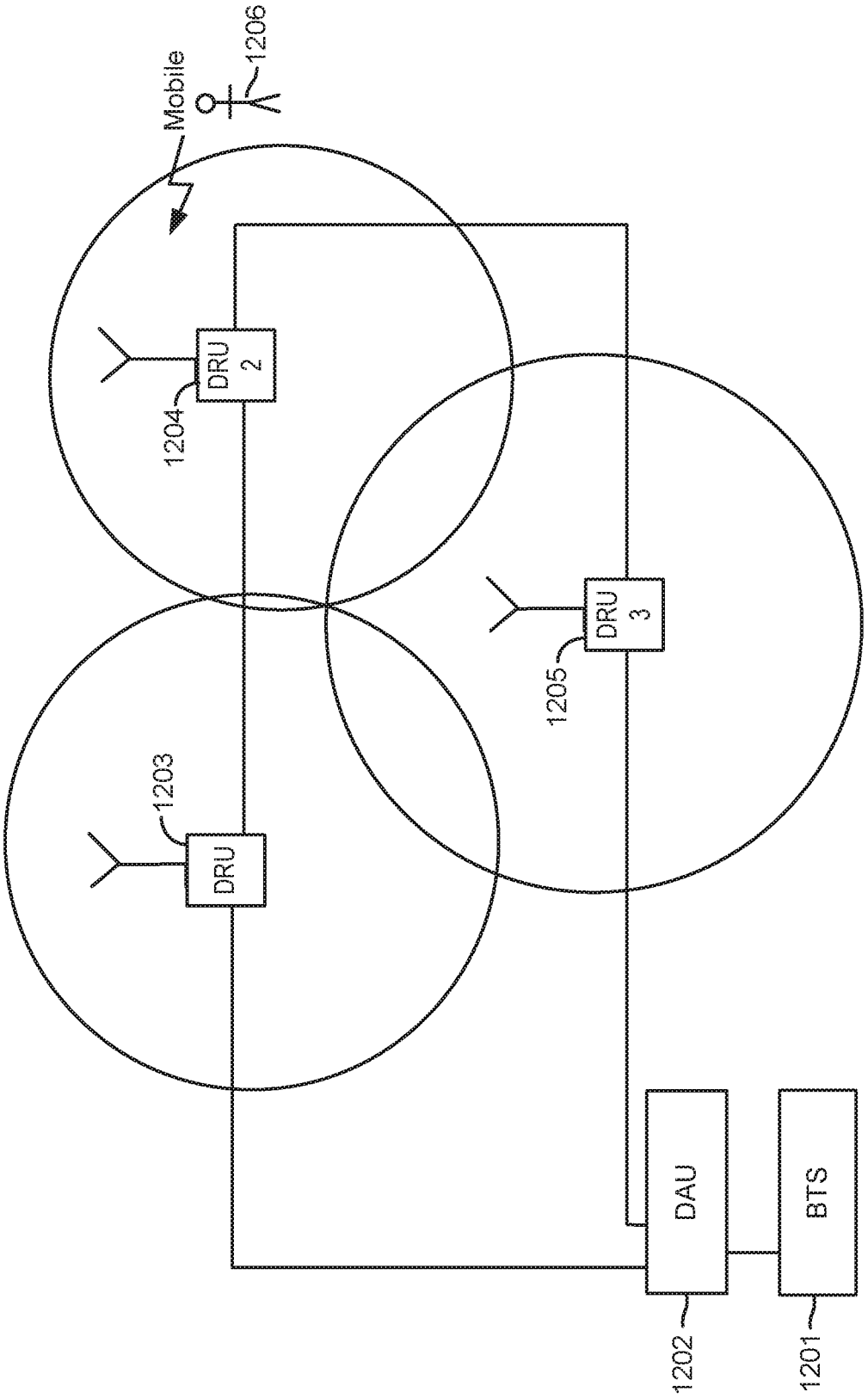

FIG. 12

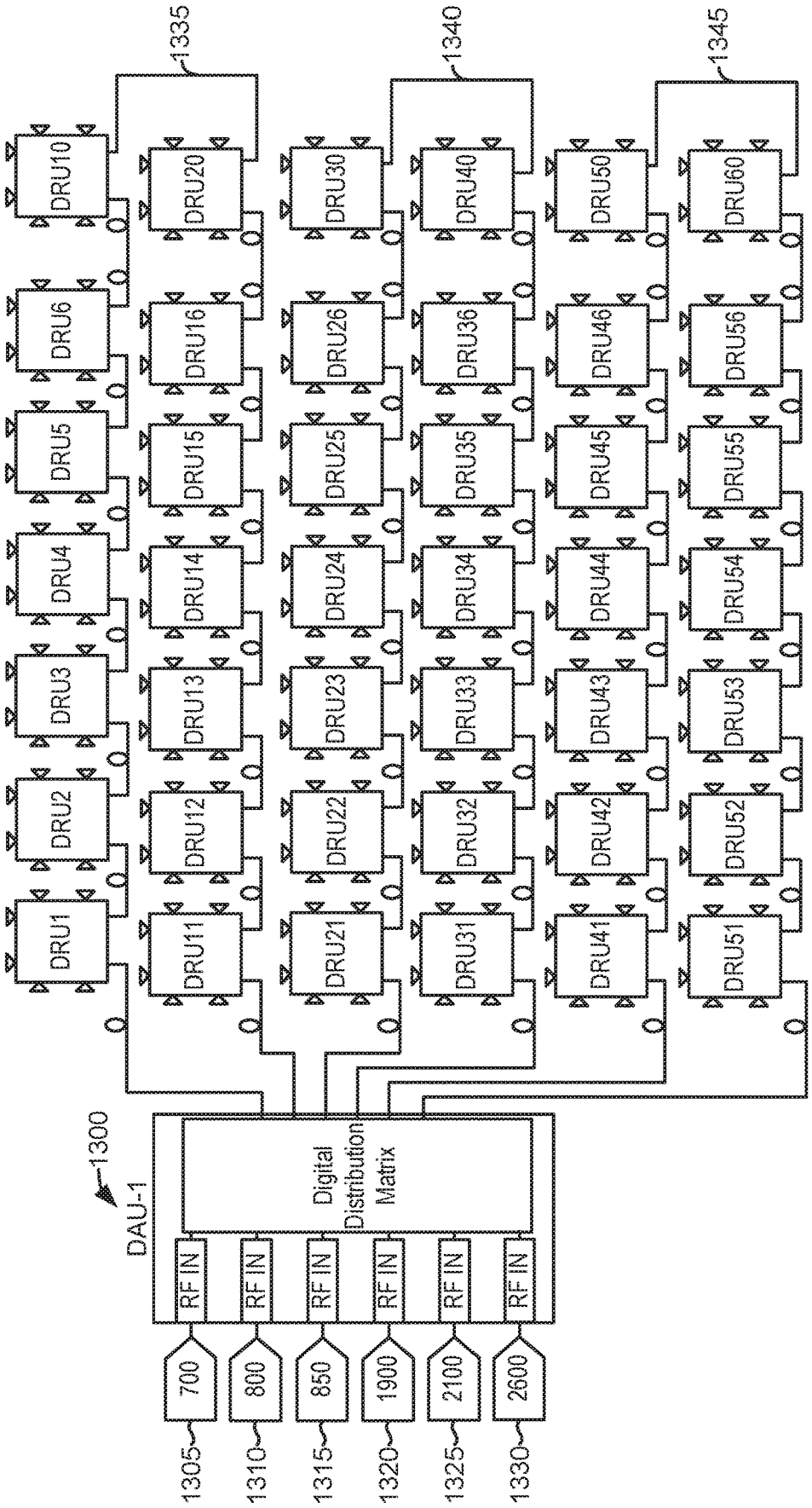
1300
DAU-1
Digital Distribution Matrix
RF IN
RF IN
RF IN
RF IN
RF IN
RF IN
700
800
850
1900
2100
2600
1305
1310
1315
1320
1325
1330
1335
1340
1345
DRU1
DRU2
DRU3
DRU4
DRU5
DRU6
DRU10
DRU11
DRU12
DRU13
DRU14
DRU15
DRU16
DRU20
DRU21
DRU22
DRU23
DRU24
DRU25
DRU26
DRU30
DRU31
DRU32
DRU33
DRU34
DRU35
DRU36
DRU40
DRU41
DRU42
DRU43
DRU44
DRU45
DRU46
DRU50
DRU51
DRU52
DRU53
DRU54
DRU55
DRU56
DRU60

FIG. 13

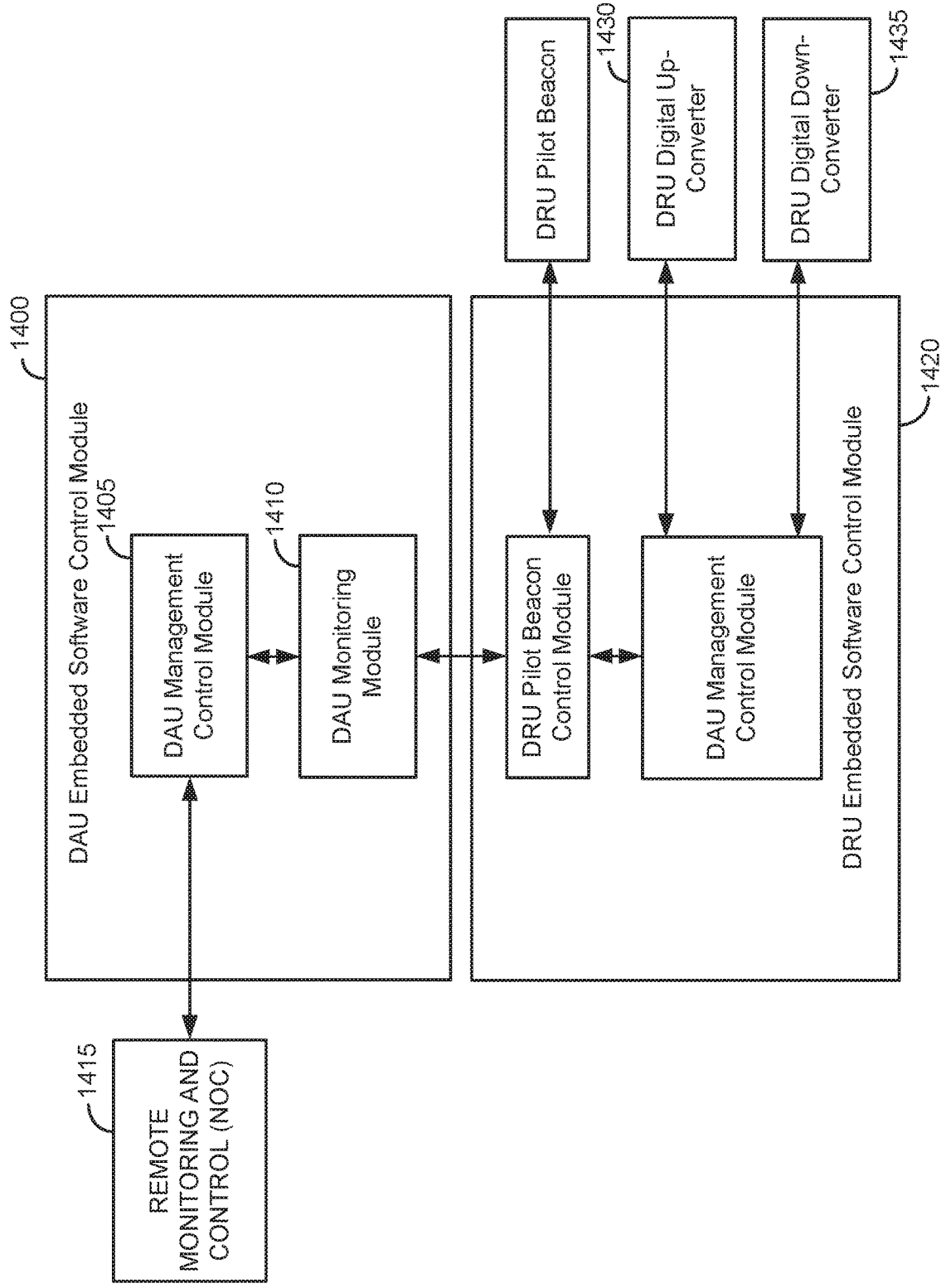
1400
DAU Embedded Software Control Module
1405
DAU Management Control Module
1410
DAU Monitoring Module
1415
REMOTE MONITORING AND CONTROL (NOC)
DRU Pilot Beacon
1430
DRU Digital Up-Converter
DRU Digital Down-Converter
1435
1420
DRU Embedded Software Control Module
DRU Pilot Beacon Control Module
DAU Management Control Module

FIG. 14

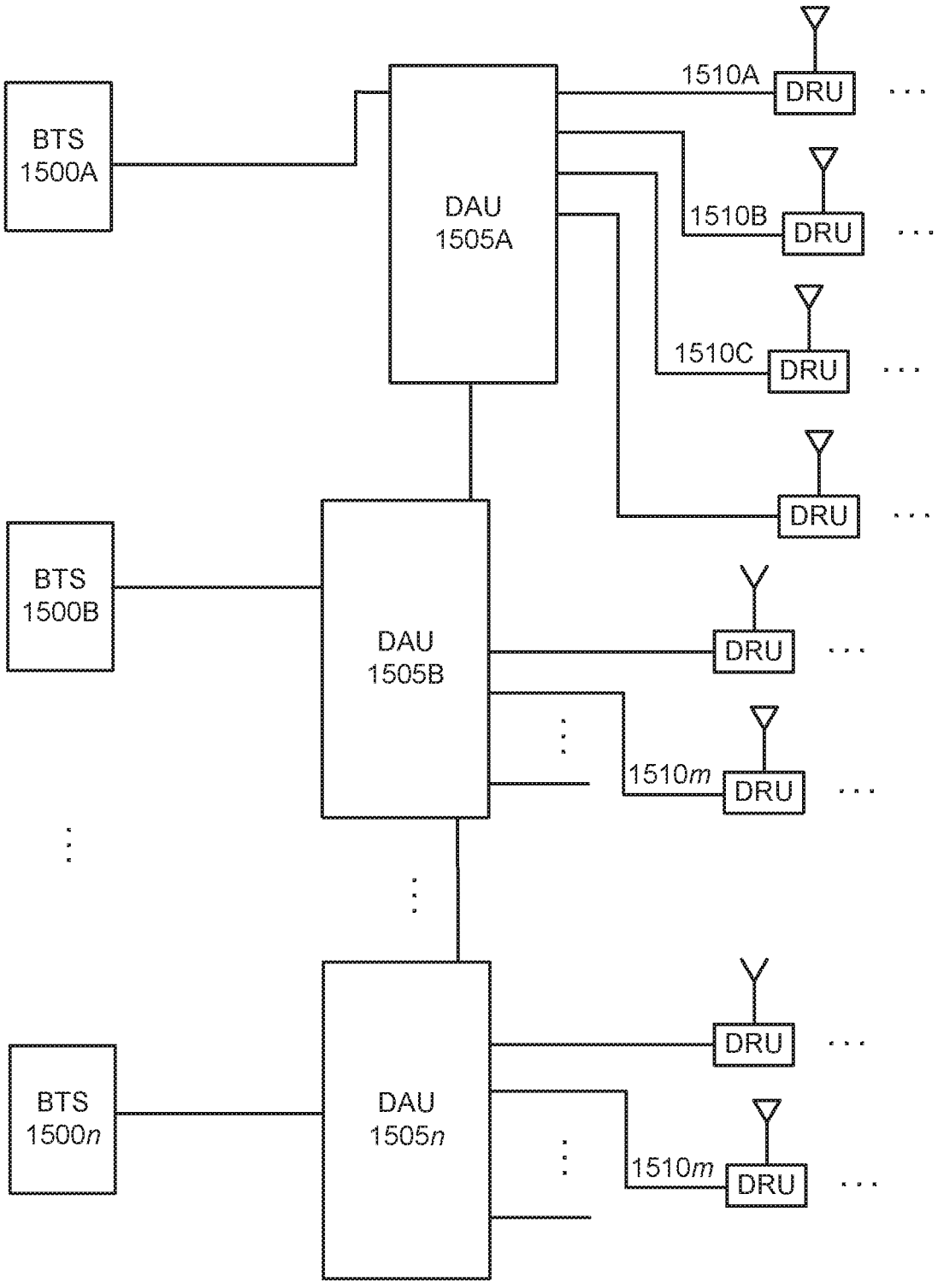
BTS
1500A
DAU
1505A
1510A
DRU
1510B
DRU
1510C
DRU
DRU
BTS
1500B
DAU
1505B
DRU
1510m
DRU
BTS
1500n
DAU
1505n
DRU
1510m
DRU

FIG. 15

VIRTUALIZED WIRELESS MESH NETWORK

CROSS-REFERENCES TO RELATED APPLICATIONS

[0001] This application is a continuation of U.S. patent application Ser. No. 13/670,290, filed on Nov. 6, 2012, entitled "Virtualized Wireless Network," which claims priority to U.S. Provisional Patent Application No. 61/556,715, filed on Nov. 7, 2011, entitled "Virtualized Wireless Network," the disclosures of which are hereby incorporated by reference in their entirety for all purposes.

BACKGROUND OF THE INVENTION

[0002] The proliferation of Internet-enabled smart phones and mobile devices have driven wireless subscribers to consume an unprecedented amount of multimedia and multimodal mobile data traffic, such as real-time video streaming, high definition movies downloading, and the like. This explosion has been augmented by machine-to-machine (M2M) type real-time applications, such as utility-meter monitoring, that operate autonomously and independently from user transactions. Such advances have resulted in exponential growth of the demand for mobile data capacity on a global scale, challenging traditional cellular networks. Yet. the supply of mobile data capacity provided by existing radio network solutions may only be growing linearly. Therefore, there may be a need to address the gap between supply and demand for mobile data capacity as the gap is rapidly widening.

SUMMARY OF THE INVENTION

[0003] These and other problems may be addressed by embodiments of the present invention. The present invention relates to wireless communication systems. More particularly, the present invention provides methods and systems related to a virtualized wireless network.

[0004] According to embodiments of the present invention, the virtualization of a wireless network is provided utilizing software configurable radio-based distributed antenna system (DAS). As described herein, embodiments of the present invention enable wireless network operators to virtualize their base station farms or hotels (allowing the operators to mix-and-match base stations from different OEM vendors) and to provide on demand wireless capacity and coverage in an anywhere/anytime format. As a result, embodiments of the present invention enable increased efficiency and utilization of new and existing assets that fundamentally change the manner in which operators are able to plan and deploy their wireless networks.

[0005] According to an embodiment of the present invention, a network is provided. The network may include a first base transceiver station (BTS). The first BTS may be operable to provide a first signal including a plurality of first carriers. The network may also include a second BTS operable to provide a second signal including a plurality of second carriers. The network may also include a set of one or more digital access units (DAUs), each of the one or more DAUs being coupled to at least one of the first BTS or the second BTS. A set of one or more digital remote units (DRUs) may be included in the network, each of the DRUs being coupled to one of the one or more DAUs and operable to broadcast the first signal or the second signal.

[0006] In some embodiments, the first BTS may be associated with a first infrastructure supplier and the second BTS may be associated with a second infrastructure supplier. In some embodiments, the first infrastructure supplier and the second infrastructure supplier are a same infrastructure supplier.

[0007] The one or more BTSs may provide the signal including the plurality of carriers using differing broadcast protocols. The different broadcast protocols may include at least one of CDMA, WCDMA, or LTE. The one or more DAUs may include a plurality of DAUs coupled via at least one of Ethernet cable, Optical Fiber, Microwave Line of Sight Link, Wireless Link, or Satellite Link. The one or more DAUs may include a plurality of DAUs coupled to the plurality of DRUs via at least one of Ethernet cable, Optical Fiber, Microwave Line of Sight Link, Wireless Link, or Satellite Link. The one or more DRUs may include a plurality of DRUs connected in a daisy chain configuration and/or a star configuration. Each of the one or more DAUs may be coupled to at least one of the first BTS or the second BTS, e.g., via at least one of a Ethernet cable, Optical Fiber, Microwave Line of Sight Link, Wireless Link, or Satellite Link.

[0008] In some embodiments of the invention, a method of operating a virtual DAS network is provided. The method may include: receiving a first signal including a first plurality of carriers from a first BTS; receiving a second signal including a second plurality of carriers from a second BTS; routing the first and second signals to a first DRU; and routing the first and second signals to a second DRU. The method may further include: associating the first and second signals with one of a plurality of DRUs based on a geographic usage pattern, the plurality of DRUs comprising the first DRU and the second DRU. Routing the first and second signals to the second DRU may include routing the first and second signals through a plurality of DAUs.

[0009] In some embodiments of the invention, a method of operating a virtual DAS network is provided. The method may include: receiving a first signal from a first BTS; receiving a second signal from a second BTS; routing the first signal to a first DRU; routing the second signal to a second DRU; receiving a third signal from the first BTS; and routing the third signal to the second DRU. The method may further include: repeatedly assigning the first DRU to one of a plurality of BTSs, the plurality of BTSs including the first BTS and the second BTS. The first DRU may be assigned at least partly in an attempt to evenly distribute combined BTS resources across DRUs in the network. Routing the third signal to the second DRU may include: routing the third signal through a plurality of DAUs.

BRIEF DESCRIPTION OF THE DRAWINGS

[0010] FIGS. **1**A and **1**B illustrate two types of wireless networks: a non-virtualized wireless network and a virtualized wireless network according to an embodiment of the present invention;

[0011] FIG. **2** is a simplified schematic diagram of a virtual DAS network according to an embodiment of the present invention;

[0012] FIG. **3** is a simplified flowchart illustrating a method of operating a virtual DAS network according to an embodiment of the present invention;

[0013] FIG. **4** is a simplified flowchart illustrating a method of operating a virtual DAS network according to an embodiment of the present invention;

[0014] FIG. **5** is a block diagram showing a multi-channel High Power Remote Radio Head Unit according to one embodiment of the present invention;

[0015] FIG. **6** is a block diagram according to one embodiment of the invention showing the basic structure and an example of a Flexible Simulcast downlink transport scenario based on having 2 DAU and 4 DRU;

[0016] FIG. **7** is a block diagram in accordance with an embodiment of the invention showing the basic structure and an example of a Flexible Simulcast uplink transport scenario based on having 2 DAU and 4 DRU;

[0017] FIG. **8** shows an embodiment of an indoor system employing multiple Remote Radio Head Units (RRUs) and a central Digital Access Unit (DAU);

[0018] FIG. **9** shows an embodiment of an indoor system in accordance with the invention which employs multiple Remote Radio Head Units (RRUs) and a central Digital Access Unit (DAU);

[0019] FIG. **10** illustrates an embodiment of a cellular network system employing multiple Remote Radio Heads according to the present invention;

[0020] FIG. **11** is a block diagram in accordance with an embodiment of the invention showing the basic structure and an example of a unidirectional channelized uplink or downlink transport. This example of a five ring scenario comprises two DAUs and twenty DRUs;

[0021] FIG. **12** illustrates an embodiment of a cellular network system employing multiple DRUs according to the present invention;

[0022] FIG. **13** illustrates an embodiment of a multi-band system employing six different services operating in different frequency channels with multiple DRUs according to the present invention;

[0023] FIG. **14** illustrates in block diagram form the interaction between the DAU embedded software control module and the DRU embedded software control module; and

[0024] FIG. **15** illustrates in block diagram form an embodiment of a DAS according to an aspect of the invention, including daisy-chained DAU's.

DETAILED DESCRIPTION OF THE INVENTION

[0025] Embodiments of the present invention generally relate to wireless communication systems employing Distributed Antenna System (DAS) as part of a virtualized wireless network. More specifically, embodiments of the present invention relate to a wireless network that utilizes virtualization technology provided by software configurable radio (SCR) (which may also be referred to as a software defined radio (SDR)) DAS, as presented in U.S. patent application U.S. Ser. No. 13/211,236 (DW-1022U), filed Aug. 16, 2011, entitled Neutral Host Architecture for a Distributed Antenna System, and US patent application U.S. Ser. No. 13/211,243 (DW-1023U), filed Aug. 16, 2011, entitled Remotely Reconfigurable Distributed Antenna System and Methods, the disclosures of which are hereby incorporated by reference in their entireties.

[0026] The proliferation of Internet-enabled smart phones and mobile devices have driven wireless subscribers to consume an unprecedented amount of multimedia and multimodal mobile data traffic, such as real-time video streaming, high definition movies downloading, and the like. This explosion is augmented by machine-to-machine (M2M) type real-time applications, such as utility-meter monitoring, that operate autonomously and independently from user transactions. This exponential growth of the demand for mobile data capacity on a global scale is challenging traditional cellular networks. The supply of mobile data capacity provided by existing radio network solutions is only growing linearly. Therefore, the gap between supply and demand for mobile data capacity is rapidly widening.

[0027] Wireless network operators currently over-provision wireless capacity in order to accommodate peak-time period usage. For example, a football stadium is normally empty most of the time. When a game or match is on, the same football stadium may have tens of thousands of attendees, and those attendees are likely to have smart phones with which they communicate with friends and family throughout the match, and in other cases, watch online instant replays on their mobile devices. Another example of variable bandwidth demand is rush hour traffic. A popular highway or freeway is usually deserted during non-peak hours (e.g., during the early morning hours). When peak traffic hours arrive (e.g., 8 a.m. or 5 p.m. for most U.S. cities), many vehicles are traveling on the busy highway or freeway. In situations where a significant number of drivers and/or passengers of the vehicles engaged in the rush hour use their cell phones for communications, bandwidth demand increases. Yet another example of variable bandwidth demand is bandwidth use within an office building or shopping mall. During regular office hours, an office-building cafeteria and/or mall food court may have little foot traffic (e.g., and relatively small bandwidth demand). However, during lunch hours, many customers may congregate in the cafeteria and/or food court and there will likely be a parallel surge of mobile data traffic. In all the above examples, wireless network operators may attempt to ensure that cell sites covering the stadiums, highways or freeways, and/or cafeterias or food courts have sufficient wireless capacities to handle the peak usage time period. With conventional wireless or radio frequency (RF) equipment, in which a base station is tied to a fixed or limited amount of capacity and a specific coverage area of a cell site, wireless network operators typically over-provision their cell sites to handle peak demand.

[0028] Over-provisioning results in wasted excess capacity during low usage time periods. In addition, the amount of over-provisioning needed at any particular cell site is difficult to gauge, and is in constant flux. If demand for mobile capacity outweighs supply at a particular cell site, then under-provisioning occurs. Under-provisioning may lead to degradation of service, large latency, service interruptions or dropped calls.

[0029] The current exponential growth of demand for mobile data capacity results in a need for exponential over-provisioning for many wireless network operators. Even if an operator had an exponential growth in capital to build capacity supply, there are physical limitations that may prevent exponential growth in installations of conventional wireless equipment such as physical space, municipality zoning requirements, power availability, and the like.

[0030] Embodiments of the present invention provide solutions to the widening gap discussed above with game-changing SCR technologies for broadband mobile networks.

SCR may comprise a complex interplay of digital signal processing (DSP) algorithms, RF technologies, intelligent network protocols, and system architectures. SCR-based distributed antenna systems (DAS) and small cell solutions may impact the user experience for wireless operators, enterprises and end users. In particular, the virtualization technology described herein may enable massive, scalable broadband data throughput while providing efficiency, flexibility, and control that is unparalleled in the wireless infrastructure industry. The increased efficiency and utilization of new and existing assets may fundamentally change the way operators plan and deploy their wireless networks.

[0031] Embodiments of the present invention provide a flexible, cloud-like architecture not available using conventional systems. FIGS. **1**A and **1**B illustrate two types of wireless networks: a non-virtualized wireless network **100** and a virtualized wireless network **150**. Referring to FIG. **1**A, in the non-virtualized wireless network **100**, base station hotels merely co-locate conventional systems together in the same locations. BTS equipment inside base station hotels may have limited, if any, interoperability among different BTS OEM vendors. For example, BTS OEM vendors may have architected their BTS equipment to work mostly with their own kind because of technical issues and/or economic motivations. From a technical viewpoint, BTS have sophisticated management and control signals that are proprietary to a particular OEM, and so BTS interoperability among different BTS OEM vendors may be difficult to achieve. Some BTS OEM vendors would claim that their BTS equipment had virtualization features, but a closer look may reveal that such claimed virtualization only occur within similar systems of the same vendor. From the economic side, BTS OEM may be incentivized to monopolize or "lock-up" as many operator customers as possible and therefore BTS OEM vendors have historically demonstrated strong resistance and reluctance to make their BTS architecture a true open standard. For example, vendors may sell BTS equipment initial at substantial discounts to wireless operators, though they may then later make substantial economic benefits against their operator customers by charging a premium on service agreements or upgrades. BTS equipment used in conjunction with conventional DAS system in a base station hotel may provide some form of joint-operation on the conventional DAS network, but again the BTS's of different OEM vendors are not interoperable with respect to each other.

[0032] Referring to FIG. **1**B, a virtualized wireless network **150** may include a base station "farm" in which base stations are provisioned in a novel way, enabling underlying BTS hardware to be commoditized and used in a freely interoperable and scalable configurations. As described herein, embodiments of the present invention may enable the mix-and-match usage of base station from different OEM vendors. RF outputs of each BTS may be subject to rigorous industry standard. However, virtualized wireless networks may include one or more DAUs connected to one or more BTSs, such that the DAUs receive standard RF output of the BTSs. Thus, the DAUs may connect to BTSs from any OEM vendor, and BTSs from any OEM vendor can thus be added heterogeneously to the network, forming a basis of a base station farm. Similarly, DAUs may connect to one or more BTSs which provide a signal including a plurality of carriers using different broadcast protocols (e.g., CDMA, WCDMA or LTE). Also, due to the novel SCR-based architecture of the DAS network, all BTS from any BTS OEM vendors can supply capacity resources interoperable to the same network. Thus, embodiments of the present invention may provide a form of true virtualization not available using conventional systems. Embodiments of the present invention may provide for virtualization of base station farms to harness massive, scalable capacity resources. Some embodiments of the present invention are applicable in relation to mixed-mode air-interfaces in which LTE is included as one of the carriers (along with a mix of other signals such as WCDMA).

[0033] As described herein, virtualization of wireless network may provide significant benefits to wireless operators. For example, multiple BTSs can be pooled into one or more BTS farms. This may vastly simplify network management and maintenance. Since each BTS in a conventional wireless network may be provisioned inflexibly to a particular coverage area, virtualization as disclosed herein may eliminate one-to-one dependency between a BTS and an associated fixed coverage area. Instead, each BTS can be flexibility provisioned for a large number of DRUs on a virtual DAS network at any time. If coverage is needed for a new area, additional DRUs can easily be added and configured to the existing virtual DAS network at the new area for the new coverage. This virtualization scheme may ensure provisioning of highest capacity availability and performance, while at the same time increasing efficiency, utilization, and flexibility of existing assets since BTS equipment can be recycled anytime, anywhere on the virtual DAS network. All these benefits could result in a substantial reduction in wireless operators' capital expenditures and operating expenses.

[0034] FIG. **2** is a simplified schematic diagram **200** of a virtual DAS network according to some embodiments. As illustrated in FIG. **2**, a plurality of BTSs (BTS**1** **202**, BTS**2** **204**, and BTS**3** **206**) are provided in a BTS farm. In the illustrated embodiment, each BTS is coupled to a DAU, although in some embodiments, multiple BTSs can be coupled to each DAU. The plurality of BTSs can be associated with different operators and utilize different carriers in different spectral bands. In the illustrated embodiment, the present disclosure enables the virtualization of wireless network for the broadcast type air interface technologies, such as CDMA, WCDMA, LTE, or other suitable standards (the "Broadcast Case"). The DAUs are networked together, as presented in U.S. patent application U.S. Ser. No. 13/211,247 (DW-1024U), filed Aug. 16, 2011, titled "Daisy Chained Ring of Remote Units for a Distributed Antenna System," the disclosure of which is hereby incorporated by reference in its entirety, using suitable connection technologies including Ethernet, optical fiber, microwave links, or the like. In the Broadcast Case, all carriers of a specific BTS may be or must be present or "powered-on" simultaneously at any particular DRU. Capacity may then be controlled by adjusting the number of DRUs at any of the BTS in the BTS farm is corresponded. For example, referring to FIG. **2**, the capacity resources of BTS **1** **202**, BTS **2** **204**, or BTS **3** **206** can be shared across all four DRUs in the virtual DAS network. The capacity resources of the three BTSs **202**, **204**, and **206** can be mixed and matched among the four DRUs, but each of the DRUs in the illustrated embodiment must be exclusively powered by one of the **3** BTSs. If more capacity is demanded at any of the four DRUs, one of the BTSs can concentrate some or all of its capacity resources to that

particular DRU by either, e.g.: (i) becoming inactive on one, two, or three of the other DRUs, and thereby focusing the BTS's capacity resources onto that particular DRU, or (ii) adding a new BTS **4** (not shown) onto the BTS farm, and have that BTS **4** focus on powering the particular DRU. This example is illustrative and is evident that one skill in the art can vary the capacity resources configuration to achieve desirable results.

[0035] In one embodiment, the present disclosure enables the virtualization of wireless network for a channelized case, such as GSM (the "Channelized Case"), through control of individual channels, or Flexible Simulcast, as presented in U.S. patent application U.S. Ser. No. 13/211,243 (DW-1023U), filed Aug. 16, 2011, titled "Remotely Reconfigurable Distributed Antenna System and Methods," the disclosure of which is hereby incorporated by reference in its entirety.

[0036] Referring to FIG. **2**, non-virtualized wireless networks may be characterized by a number of criteria and limitations. In a typical non-virtualized wireless network, one wireless operator builds a wireless network for its own exclusive use. Each BTS on the wireless network covers a fixed cell area, and over-provisioning is needed to accommodate peak time traffic. Wireless operators would need to add BTS with more capacity. This is a non-scalable approach.

[0037] Embodiments of the present invention provide a virtualized wireless network that is characterized by a number of benefits and improvements over conventional systems. For example, a virtualized wireless network such as one disclosed herein may allow one wireless network to serve one wireless operator exclusively or the same wireless network to serve multiple wireless operators, as in a "neutral host" environment. Further, since all heterogeneous BTSs in the BTS farm or cloud-farm need not be fixed to any particular cell site (as in the case of conventional wireless network), each of the BTS in the farm or cloud-farm can provide capacity and coverage to one of the multiple configurable areas where a suitable DRU is located. As a result, unlimited capacity can, in theory, be harnessed from the BTS farm or cloud-farm to the virtualized wireless network. This is a novel and highly scalable approach.

[0038] FIG. **3** is a simplified flowchart illustrating a method of operating a virtual DAS network according to an embodiment of the present invention. At **310**, a first signal including a first plurality of carriers from a first BTS may be received. At **312**, a second signal including a second plurality of carriers from a second BTS may be received. At **314**, the first and second signal may be routed to a first DRU. At **316**, the first and second signal may be routed to a second DRU.

[0039] FIG. **4** is a simplified flowchart illustrating a method of operating a virtual DAS network according to an embodiment of the present invention. At **410**, a first signal from a first BTS may be received. At **412**, a second signal from a second BTS may be received. At **414**, the first signal may be routed to a first DRU. At **416**, the second signal may be routed to a second DRU. Signals subsequently received from the BTSs may be routed differently (e.g., based on network demands). For example, at **418**, a third signal may be received from the first BTS. At **420**, the third signal may be routed to the second DRU, rather than the first DRU. It may be apparent that the descriptions of FIGS. **3** and **4** may correspond to any of the descriptions provided in FIGS. **1**B and **2**.

[0040] It should be appreciated that the specific steps illustrated in FIG. **3** or FIG. **4** provide a particular method of operating a virtual DAS network according to some embodiments of the present invention. Other sequences of steps may also be performed according to alternative embodiments. For example, alternative embodiments of the present invention may perform the steps outlined above in a different order. Moreover, the individual steps illustrated in FIG. **3** or FIG. **4** may include multiple sub-steps that may be performed in various sequences as appropriate to the individual step. Furthermore, additional steps may be added or removed depending on the particular applications. One of ordinary skill in the art would recognize many variations, modifications, and alternatives.

[0041] An embodiment of a Remote Radio Head Unit in accordance with the invention is shown in FIG. **5**. Additional description related to remote radio head units is provided in U.S. patent application Ser. No. 13/211,236, filed on Aug. 16, 2011, the disclosure of which is hereby incorporated by reference in its entirety for all purposes. Fiber **1**, indicated at **500**A, may be a high speed fiber cable that transports data between the BTS and the Remote Radio Head Unit. Fiber **2**, indicated at **500**B, may be used to daisy chain other remote radio head units which are thereby interconnected to the BTS or DAU. The software-defined digital platform **516** may perform baseband signal processing, typically in an FPGA or equivalent. Building block **503** is a Serializer/Deserializer. The deserializer portion may extract the serial input bit stream from the optical fiber **501** and converts it into a parallel bit stream. The serializer portion performs the inverse operation for sending data from the Remote Radio Head Unit to the BTS. In an embodiment, the two distinct bit streams communicate with the BTS using different optical wavelengths over one fiber, although multiple fibers can be used in alternative arrangements. The deframer **504** deciphers the structure of the incoming bit stream and sends the deframed data to the Crest Factor Reduction Algorithm **509**. The Crest Factor Reduction block **509** may reduce the Peak-to-Average Ratio of the incoming signal so as to improve the Power amplifier DC-to-RF conversion efficiency. The waveform may then be presented to the Digital Predistorter block **508**. The digital predistorter may compensate for the nonlinearities of the Power Amplifier **521** in an adaptive feedback loop. Digital Upconverter **510** may filter and digitally translate the deframed signal to an IF frequency. The Framer **504** may take the data from the two digital downconverters **506**, **507** and may pack it into a Frame for transmission to the BTS over the optical fiber **501**. Elements **511** and **512** are Analog to Digital converters that may be used to translate the two analog receive signals into digital signals. The receiver comprises a diversity branch which contains a downconverter **517** and a Band Pass Filter **523**. The main branch has a receiver path comprised of a duplexer **524** and a downconverter **518**. In some embodiments, one or both downconverters **517** and **518** can have an integral uplink low-noise amplifier.

[0042] The power amplifier has an output coupler for extracting a replica of the output signal in the feedback path. The feedback signal is frequency-translated by downconverter **519** to either an IF frequency or baseband and presented to an Analog to Digital converter **513**. This

feedback signal is used in an adaptive loop for performing Digital Predistortion to compensate for any nonlinearities created by the power amplifier.

[0043] The Ethernet cable is used to locally communicate with the Remote Radio Head Unit. Switch **526** is used to allow easy access to either the FPGA or the CPU. DC power converters **528** and **529** are used to obtain the desired DC voltages for the Remote Radio Head Unit. Either an external voltage can be connected directly into the RRU or the DC power may be supplied through the Ethernet cable.

[0044] Although the description of the instant embodiment is directed to an application where a second optical fiber connection provides a capability for daisy chaining to other Remote Radio Head Units, an alternative embodiment provides multiple optical fiber connections to support a modified "hybrid star" configuration for appropriate applications which dictate this particular optical transport network configuration.

[0045] Referring to FIG. **6** of the instant patent application, an alternative embodiment of the present invention may be described as follows. In a previous arrangements, an embodiment involved having downlink signals from two separate base stations belonging to the same wireless operator enter DAU**1** and DAU**2** input ports respectively. In an alternative embodiment, a second composite downlink input signal from e.g., a second base station belonging to a different wireless operator enters DAU**2** at the DAU**2** RF input port. In this embodiment, signals belonging to both the first operator and the second operator are converted and transported to RRU**1** **603**, RRU**2** **604**, RRU**3** **605** and RRU**4** **606**, respectively. This embodiment provides an example of a neutral host wireless system, where multiple wireless operators share a common infrastructure comprised of DAU**1** **601**, DAU**2** **602**, RRU**1** **603**, RRU**2** **604**, RRU**3** **605** and RRU**4** **606**. Signals belonging to both the first operator and the second may reach all RRUs described herein because DAU**1** **601** and DAU**2** **602** may be connected via cable **613**. Thus, bandwidths **607** provided to DAU**1** **601** and bandwidths **608** provided to DAU**2** **602** may reach any and all of the RRUs described herein. For example, all carrier bandwidths **607** and **608** may be provided to RRU**1** **603**, as shown in bandwidth output **609**. In contrast, only bandwidth inputs **1**, **3**, **4**, **6** may need to be provided to RRU**2** **604**, as shown in bandwidth output **610**. Additionally, only bandwidth inputs **2** **6** may need to be provided to RRU **3** **605**, as shown in bandwidth output **611**. Last, RRU**4** **606** may only need to provide bandwidth inputs **1**, **4**, **5**, and **8** as shown in bandwidth output **612**. Thus, for example, two different carriers, one each controlling DAU**1** and DAU**2**, respectively, may be able to provide coverage to all of the RRUs according to embodiments presented herein. All the previously mentioned features and advantages accrue to each of the two wireless operators. Additional description related to this embodiment is provided in U.S. patent application Ser. No. 13/211,243, filed on Aug. 16, 2011, the disclosure of which is hereby incorporated by reference in its entirety for all purposes.

[0046] As disclosed in U.S. Provisional Application Ser. No. 61/374,593, titled "Neutral Host Architecture for a Distributed Antenna System," filed Aug. 17, 2010 and also referring to FIG. **6** of the instant patent application, the Digital Up Converters present in the RRU can be programmed to process various signal formats and modulation types including FDMA, CDMA, TDMA, OFDMA and others. Also, the Digital Up Converters present in the respective RRUs can be programmed to operate with signals to be transmitted within various frequency bands subject to the capabilities and limitations of the system architecture disclosed in U.S. Provisional Application Ser. No. 61/374,593, titled "Neutral Host Architecture for a Distributed Antenna System," filed Aug. 17, 2010. In one embodiment of the present invention where a wideband CDMA signal is present within e.g., the bandwidth corresponding to carrier 1 at the input port to DAU**1**, the transmitted signal at the antenna ports of RRU**1**, RRU**2** and RRU**4** will be a wideband CDMA signal which is virtually identical to the signal present within the bandwidth corresponding to carrier 1 at the input port to DAU**1**.

[0047] As disclosed in U.S. Provisional Application Ser. No. 61/374,593, titled "Neutral Host Architecture for a Distributed Antenna System," filed Aug. 17, 2010 and also referring to FIG. **6** of the instant patent application, it is understood that the Digital Up Converters present in the respective RRUs can be programmed to transmit any desired composite signal format to each of the respective RRU antenna ports. As an example, the Digital Up Converters present in RRU**1** and RRU**2** can be dynamically software-reconfigured as described previously so that the signal present at the antenna port of RRU**1** would correspond to the spectral profile shown in FIG. **6** as **610**, and also that the signal present at the antenna port of RRU**2** would correspond to the spectral profile shown in FIG. **6** as **609**. One application for such a dynamic re-arrangement of RRU capacity would be e.g., if a company meeting were suddenly convened in the area of the enterprise corresponding to the coverage area of RRU**2**. Although the description of some embodiments in the instant application refers to base station signals **607** and **608** as being on different frequencies, the system and method of the present invention readily supports configurations where one or more of the carriers which are part of base station signals **607** and **608** and are identical frequencies, since the base station signals are digitized, packetized, routed and switched to the desired RRU.

[0048] Another embodiment of the Distributed Antenna System in accordance with the present invention is shown in FIG. **7**. As disclosed in U.S. Provisional Application Ser. No. 61/374,593, titled "Neutral Host Architecture for a Distributed Antenna System," filed Aug. 17, 2010 and also as shown in FIG. **7** the Flexible Simulcast System **700** can be used to explain the operation of Flexible Simulcast with regard to uplink signals. As discussed previously with regard to downlink signals and by referring to FIG. **6**, the uplink system shown in FIG. **7** is mainly comprised of DAU**1** indicated at **701**, RRU**1** indicated at **703**, RRU**2** indicated at **704**, DAU**2** indicated at **702**, RRU**3** indicated at **705**, and RRU**4** indicated at **706**. In a manner similar to the downlink operation explained by referring to FIG. **6**, the operation of the uplink system shown in FIG. **7** can be understood as follows.

[0049] The Digital Down Converters present in each of RRU**1** **703**, RRU**2** **704**, RRU**3** **705** and RRU**4** **706** are dynamically software-configured as described previously so that uplink signals of the appropriate desired signal format (s) present at the receive antenna ports of the respective RRU**1** **703**, RRU**2** **704**, RRU**3** **705** and RRU**4** **706** are selected based on the desired uplink band(s) to be processed and filtered, converted and transported to the appropriate uplink output port of either DAU**1** **701** or DAU**2** **702**. The

DAUs and RRUs frame the individual data packets corresponding to their respective radio signature using the Common Public Interface Standard (CPRI). Other Interface standards are applicable provided they uniquely identify data packets with respective RRUs. Header information is transmitted along with the data packet which identifies the RRU and DAU that corresponds to the individual data packet.

[0050] In one example for the embodiment shown in FIG. **7**, RRU**1** **703** and RRU**3** **705** are configured to receive uplink signals within the Carrier 2 bandwidth, whereas RRU**2** **704** and RRU**4** **706** are both configured to reject uplink signals within the Carrier 2 bandwidth. When RRU**3** **705** receives a strong enough signal at its receive antenna port within the Carrier 2 bandwidth to be properly filtered and processed, the Digital Down Converters within RRU**3** facilitate processing and conversion. Similarly, when RRU**1** receives a strong enough signal at its receive antenna port within the Carrier 2 bandwidth to be properly filtered and processed, the Digital Down Converters within RRU**1** **703** facilitate processing and conversion. The signals from RRU**1** **703** and RRU**3** **705** are combined based on the active signal combining algorithm, and are fed to the base station connected to the uplink output port of DAU**1** **701**. The term simulcast is frequently used to describe the operation of RRU**1** **703** and RRU**3** **705** with regard to uplink and downlink signals within Carrier 2 bandwidth. The term Flexible Simulcast refers to the fact that the present invention supports dynamic and/or manual rearrangement of which specific RRU are involved in the signal combining process for each Carrier bandwidth.

[0051] Referring to FIG. **7**, the Digital Down Converters present in RRU**1** are configured to receive and process signals within Carrier 1-8 bandwidths. The Digital Down Converters present in RRU**2** are configured to receive and process signals within Carrier 1, 3, 4 and 6 bandwidths. The Digital Down Converters present in RRU**3** are configured to receive and process signals within Carrier 2 and 6 bandwidths. The Digital Down Converters present in RRU**4** are configured to receive and process signals within Carrier 1, 4, 5 and 8 bandwidths. The respective high-speed digital signals resulting from processing performed within each of the four RRU are routed to the two DAUs. As described previously, the uplink signals from the four RRUs are combined within the respective DAU corresponding to each base station.

[0052] An aspect of the present invention includes an integrated Pilot Beacon function within the each RRU. In an embodiment, each RRU comprises a unique software programmable Pilot Beacon as discussed hereinafter This approach is intended for use in CDMA and/or WCDMA indoor DAS networks. A very similar approach can be effective for indoor location accuracy enhancement for other types of networks such as LTE and WiMAX. Because each RRU is already controlled and monitored via the DAUs which comprise the network, there is no need for costly deployment of additional dedicated wireless modems for remote monitoring and control of pilot beacons.

[0053] An RRU-integrated Pilot Beacon approach is employed for both CDMA and WCDMA networks. Each operational pilot beacon function within an RRU employs a unique PN code (in that area) which effectively divides the WCDMA or CDMA indoor network coverage area into multiple small "zones" (which each correspond to the coverage area of a low-power Pilot Beacon). Each Pilot Beacon's location, PN code and RF Power level are known by the network. Each Pilot Beacon is synchronized to the WCDMA or CDMA network, via its connection to the DAU.

[0054] Unlike the transmit signal from a base station which is "dynamic," the Pilot Beacon transmit signal will be effectively "static" and its downlink messages will not change over time based on network conditions.

[0055] For a WCDMA network, in Idle mode each mobile subscriber terminal is able to perform Pilot Signal measurements of downlink signals transmitted by base stations and Pilot Beacons. When the WCDMA mobile subscriber terminal transitions to Active mode, it reports to the serving cell all its Pilot Signal measurements for base stations and for Pilot Beacons. For CDMA networks, the operation is very similar. For some RRU deployed in an indoor network, the RRU can be provisioned as either a Pilot Beacon or to serve mobile subscribers in a particular operator bandwidth, but not both.

[0056] For a WCDMA network, existing inherent capabilities of the globally-standardized networks are employed. The WCDMA mobile subscriber terminal is able to measure the strongest CPICH RSCP (Pilot Signal Code Power) in either Idle mode or any of several active modes. Also, measurements of CPICH Ec/No by the mobile subscriber terminal in either Idle mode or any of several active modes are possible. As a result, the mobile subscriber terminal reports all available RSCP and Ec/No measurements via the serving base station (whether indoor or outdoor) to the network. Based on that information, the most likely mobile subscriber terminal location is calculated and/or determined. For CDMA networks, the operation is very similar to the process described herein.

[0057] A previously described embodiment of the present invention referring to FIG. **6** involved having a wideband CDMA signal present within e.g., the bandwidth corresponding to carrier 1 at the input port to DAU**1**. In the previously described embodiment, the transmitted signal at the antenna ports of RRU**1**, RRU**2** and RRU**4** is a wideband CDMA signal which is virtually identical to the signal present within the bandwidth corresponding to carrier 1 at the input port to DAU**1**. An alternative embodiment of the present invention is one where a wideband CDMA signal is present within e.g., the bandwidth corresponding to carrier 1 at the input port to DAU**1**. However, in the alternative embodiment the transmitted signal at the antenna port of RRU**1** differs slightly from the previous embodiment. In the alternative embodiment, a wideband CDMA signal is present within e.g., the bandwidth corresponding to carrier 1 at the input port to DAU**1**. The transmitted signal from RRU**1** is a combination of the wideband CDMA signal which was present at the input port to DAU**1**, along with a specialized WCDMA pilot beacon signal. The WCDMA pilot beacon signal is intentionally set well below the level of the base station pilot signal.

[0058] A further alternative embodiment can be explained referring to FIG. **8** which applies in the case where CDMA signals are generated by the base station connected to the input port of DAU**1**. In this further alternative embodiment of the present invention, the transmitted signal at the antenna port of RRU**1** is a combination of the CDMA signal which was present at the input port to DAU**1**, along with a specialized CDMA pilot beacon signal. The CDMA pilot beacon signal is intentionally set well below the level of the base station pilot signal.

[0059] An embodiment of the present invention provides enhanced accuracy for determining location of indoor wireless subscribers. FIG. **9** depicts a typical indoor system employing multiple Remote Radio Head Units (RRUs) and a central Digital Access Unit (DAU). Each Remote Radio Head provides a unique header information on data received by that Remote Radio Head. This header information in conjunction with the mobile user's radio signature are used to localize the user to a particular cell. The DAU signal processing can identify the individual carriers and their corresponding time slots. A header is included with each data packet that uniquely identifies the corresponding RRU. The DAU can detect the carrier frequency and the corresponding time slot associated with the individual RRUs. The DAU has a running data base that identifies each carrier frequency and time slot with a respective RRU. The carrier frequency and time slot is the radio signature that uniquely identifies the GSM user.

[0060] The DAU communicates with a Network Operation Center (NOC) via a Ethernet connection or an external modem, as depicted in FIG. **10**. Once a E911 call is initiated the Mobile Switching Center (MSC) in conjunction with the NOC can identify the corresponding BaseTransceiver Station (BTS) where the user has placed the call. The user can be localized within a BTS cell. The NOC then makes a request to the individual DAUs to determine if the E911 radio signature is active in their indoor cell. The DAU checks its data base for the active carrier frequency and time slot. If that radio signature is active in the DAU, then that DAU will provide the NOC with the location information of the corresponding RRU.

[0061] A further embodiment of the present invention includes LTE to provide enhanced accuracy for determining the location of indoor wireless subscribers. GSM uses individual carriers and time slots to distinguish users whereas LTE uses multiple carriers and time slot information to distinguish users. The DAU can simultaneously detect multiple carriers and their corresponding time slots to uniquely identify the LTE user. The DAU has a running data base that identifies the carrier frequencies and time slot radio signature for the respective RRU. This information can be retrieved from the NOC once a request is made to the DAU.

[0062] Referring next to FIG. **11**, a still further an alternative embodiment of the present invention may be understood. Additional description related to this alternative embodiment is provided in U.S. patent application Ser. No. 13/211,247, filed on Aug. 16, 2011, the disclosure of which is hereby incorporated by reference in its entirety for all purposes. In the embodiment of FIG. **11**, a first composite signal enters a first DAU **1100** at that DAU's RF input port from a base station **1105**, and a second composite downlink input signal from, e.g., a second base station **1110** belonging to a different wireless operator enters DAU **1115** at that second DAU's RF input port. DAU **1100** directly supports two rings **1120** and **1125**, DAU **1115** directly supports two rings **1130** and **1135**, and a ring **1140** is shared between DAU **1100** and DAU **1105**. Each of the rings comprises daisy-chained DRU's generally indicated at **1145** and connected via, for example, fiber optic links. It will be noted that channels A are transported in the opposite sense as channels B. The downlink channels in subset A are transported counterclockwise around each ring, whereas the channels in subset B are transported in a clockwise sense around each ring. In this embodiment, signals belonging to both the first operator and the second operator are converted and transported to the DRU's **1145** on ring **1140** because DAU **1100** and DAU **1105** are daisy-chained through the fiber optic cable **1140**. This embodiment provides an example of a neutral host wireless system, where multiple wireless operators share a common infrastructure comprised of DAU **1100**, DAU **1115**, and DRU's **1145**. All the previously mentioned features and advantages accrue to each of the two wireless operators. It will further be appreciated that, while FIG. **11** illustrates only two DAU's linked in daisy-chain style, it is possible to daisy chain a larger plurality of DAU's, and the daisy-chained DAU's can also be configured in a ring configuration similar to the manner in which the DRU's are connected. This arranged is illustrated in FIG. **15**, below.

[0063] Referring next to FIG. **12**, an alternative embodiment of the present invention may be better understood. Each DRU has a coverage radius that can be adjusted based on the power transmission from that particular remote unit. The DAU controls the various DRU's transmission power and can optimize the overall coverage zone. In the illustrated embodiment, DAU **1202**, again under the control of a NOC (not shown), is associated with a base station **1201** and in turn interfaces with three DRU's **1203**, **1204** and **1205**. A user **1206** with a mobile device is provided relatively uniform coverage throughout the area covered by the three DRU's.

[0064] Referring next to FIG. **13**, a still further alternative embodiment may be better appreciated. The input frequency bands **1305-1330** (here denoted as six frequency bands at 700, 800, 850, 1900, 2100 and 2600 MHz) are input into the DAU **1300** from the BTS's (not shown). The DAU includes, among other functionalities discussed herein, an RF IN portion for each band, and a digital distribution matrix for distributing the frequency bands to a plurality of DRU's, indicated as DRU**1**-DRU**60**, daisy-chained along three separate rings **1335**, **1340** and **1345** for achieving the desired coverage. The frequency bands are transported to either all or a subset of DRUs. The particular number of frequency bands, DAU's, DRU's and rings is exemplary only, and can, in practice, be any number appropriate to the performance capabilities and needs of the network.

[0065] Referring next to FIG. **14**, the software embedded in the DAU and DRU, which controls the operation of keys functions of these devices, can be better understood. In particular, the DAU embedded software control module **1400** comprises a DAU Management Control Module **1405** and a DAU monitoring module **1410**. The DAU Management Control Module **1405** communicates with the NOC **1415**, and also the DAU monitoring module **1410**. One such key function is determining and/or setting the appropriate amount of radio resources (such as RF carriers, CDMA codes or TDMA time slots) assigned to a particular DRU or group of DRUs to meet desired capacity and throughput objectives. As noted previously, the NOC **1415** monitors the DAS operation and sends commands to the DAU's for configuring various functions of the DRU's as well as the DAU, in at least some embodiments.

[0066] The DAU Monitoring module, in addition to other functions, detects which carriers and corresponding time slots are active for each DRU. The DAU Management Control module communicates with the DRU Embedded Software Control module **1420** over a fiber optic link control channel via a control protocol. In an embodiment, the control protocol comprises headers together with packets of

data, such that both control information and data are transmitted to the DRU's together as a message. DRU functions or features that the header would control in the DRU are typically implementation specific and can include, among other things, measuring uplink and downlink power, measuring gain of uplink and downlink, and monitoring alarms in the DRU.

[0067] In turn, the DRU Management Control module **1425** within the DRU Embedded Software Control Module sets the individual parameters of all the DRU Digital Up-Converters **1430** to enable or disable specific radio resources from being transmitted by a particular DRU or group of DRUs, and also sets the individual parameters of all the DRU Digital Down-Converters **1435** to enable or disable specific radio resources from being transmitted by a particular DRU or group of DRUs. In addition, the DRU Embedded Software Control Module comprises a DRU Pilot Beacon Control Module **1440**, which communicates with a DRU Pilot Beacon **1445**.

[0068] Referring next to FIG. **15**, an embodiment of a daisy-chained configuration of DAU's is illustrated, together with a daisy-chained configuration of DRU's. In an embodiment, a plurality of base stations **1500**A-**1500***n* are each associated with one of DAU's **1505**A-n. The DAU's are daisy-chained, and each DAU communicates with one or more daisy-chains **1510**A-**1510***m* of DRU's which may or may not be arranged in a ring configuration. It will be appreciated that the DAU's can also be configured in a ring configuration, as discussed above.

[0069] An algorithm operating within the DAU Monitoring module which detects which carriers and corresponding time slots for each carrier are active for each DRU provides information to the DAU Management Control module to help identify when, e.g., a particular downlink carrier is loaded by a percentage greater than a predetermined threshold whose value is communicated to the DAU Management Control module by the DAU's Remote Monitoring and Control function **1415**. If that occurs, the DAU Management Control module can adaptively modify the system configuration to begin to deploy, typically although not necessarily slowly, additional radio resources (such as RF carriers, CDMA codes or TDMA time slots) for use by a particular DRU which need those radio resources within its coverage area. At the same time, usually the DAU Management Control module adaptively modifies the system configuration to begin to remove, again typically slowly, certain radio resources (such as RF carriers, CDMA codes or TDMA time slots) for use by a particular DRU where that DRU no longer needs those radio resources within its coverage area.

[0070] It is also understood that the examples and embodiments described herein are for illustrative purposes only and that various modifications or changes in light thereof will be suggested to persons skilled in the art and are to be included within the spirit and purview of this application and scope of the appended claims.

1. A network comprising:

a first base transceiver station (BTS) operable to provide a first signal including a plurality of first carriers;

a second BTS operable to provide a second signal including a plurality of second carriers;

a set of one or more digital access units (DAUs), each of the one or more DAUs being coupled to at least one of the first BTS or the second BTS; and

a set of one or more digital remote units (DRUs), each of the DRUs being coupled to one of the one or more DAUs and operable to broadcast the first signal or the second signal.

2-22. (canceled)

* * * * *