INSTALLATION MANUAL

MARINE ENGINES & GENERATORS

DIESEL AND GASOLINE

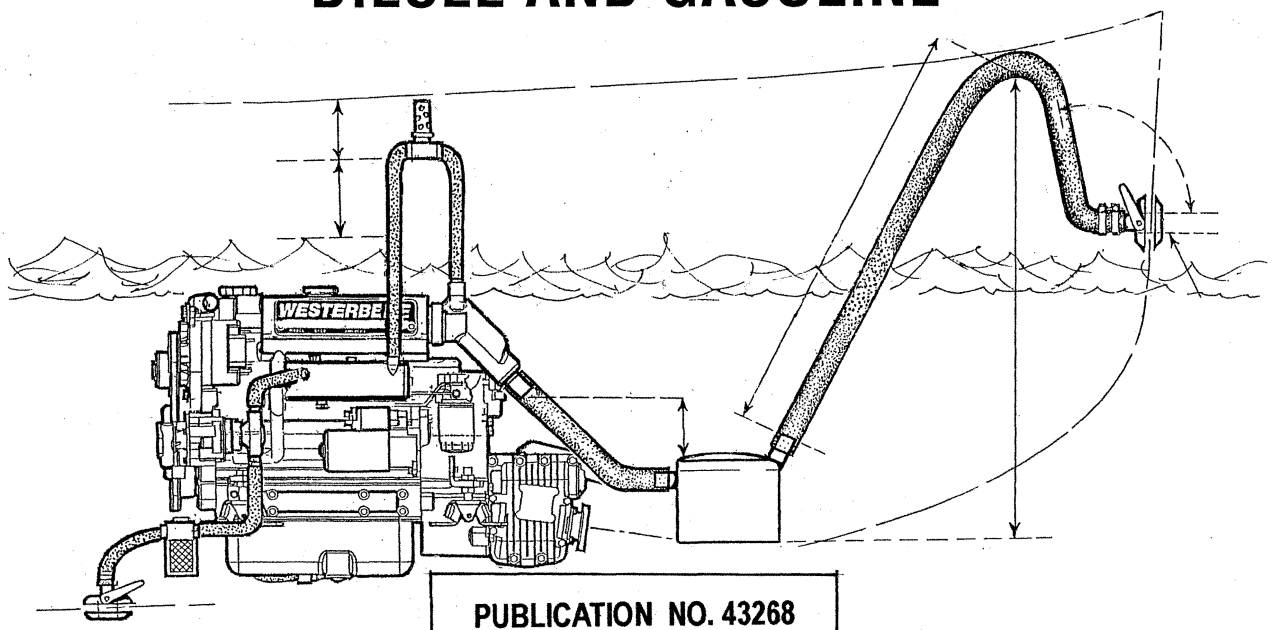

PUBLICATION NO. 43268
REVISION 4
JUNE 2016

WESTERBEKE

WESTERBEKE CORPORATION • 150 JOHN HANCOCK ROAD
MYLES STANDISH INDUSTRIAL PARK • TAUNTON MA 02780
WEBSITE: WWW.WESTERBEKE.COM

NMMA *Member National Marine Manufacturers Association*

⚠ WARNING

Exhaust gasses contain Carbon Monoxide, an odorless and colorless gas. Carbon Monoxide is poisonous and can cause unconsciousness and death. Symptoms of Carbon Monoxide exposure can include:

- ***Dizziness***
- ***Nausea***
- ***Headache***
- ***Weakness and Sleepiness***
- ***Throbbing in Temples***
- ***Muscular Twitching***
- ***Vomiting***
- ***Inability to Think Coherently***

IF YOU OR ANYONE ELSE EXPERIENCE ANY OF THESE SYMPTOMS, GET OUT INTO THE FRESH AIR IMMEDIATELY. If symptoms persist, seek medical attention. Shut down the unit and do not restart until it has been inspected and repaired.

A WARNING DECAL is provided by WESTERBEKE and should be fixed to a bulkhead near your engine or generator.

WESTERBEKE also recommends installing CARBON MONOXIDE DETECTORS in the living/sleeping quarters of your vessel. They are inexpensive and easily obtainable at your local marine store.

CALIFORNIA PROPOSITION 65 WARNING

Marine diesel and gasoline engine exhaust and some of its constituents are known to the State of California to cause cancer, birth defects, and other reproductive harm.

TABLE OF CONTENTS

Introduction 2
- Installation Codes and Safety Standards 2
- Recommended Reading 2
- Product Software 3
- Notes, Cautions and Warnings 3
- Inspection of Shipment 3

Engine Location and Mounting 4
- Engine Location 4
- Engine Bed 4
- SSB Radio/Electronic Grounding 4
- Engine Mounting 5

Generator Location and Mounting 6
- Generator Location 6
- Generator Mounting 6
- SOUND GUARD 7

Rigging and Lifting 8

Propeller Shaft Alignment 9
- Propeller Shaft Coupling (Engines) 9
- Flexible Couplings 9
- Alignment 10

Propeller Selection 11

Exhaust System/ABYC Standards 11

Exhaust System Installation 12
- Recommended Guidelines 12
- Check Valves 14
- Exhaust Back Pressure 14,16
- Water Separator Exhaust Systems 15
- Dry Stack Exhaust Systems 15
- Exhaust Hose 16
- Exhaust Elbow 17
- Precautions 18

Electrical System 19
- DC Electrical Connections 19
- Control Panels for Propulsion Engines 19
- Diesel Generator Instrument Panels 19
- Optional Instrument Panel (Gasoline Generators) 19
- Optional Remote Start/Stop Panel (Diesel and Gasoline Generators) 19
- D-Net Control Panels 21
- Control Wiring 20
- AC Wiring (Generators) 20
- Batteries 20
- D-Net Control Panels 21
- Admiral Control Panel 22
- Captain Control Panel 23

Fuel System 24
- Fuel Tanks – General 24
- Fuel Tanks – Gasoline 24
- Fuel Tanks Located Above The Engine/Generator 25
- Fuel Tanks Located Below The Engine/Generator 25
- Gasoline Engine Fuel Tanks 25
- Diesel Fuel System Anti-Siphon Devices 25
- Dual Purpose Fuel Tank 26
- Fuel Lines 26
  - Rigid Fuel Lines 26
  - Flexible Fuel Lines 26
- Shut-Off Valves 27
- Fuel Filters 27
- Fuel 27

Cooling System 28
- Raw Water Intake 28
- Raw Water Outlet 28
- Fittings 28
- Coolant Recovery Tank 29
- Coolant 29

Engine Oil 30
- Oil Specifications 30
- Oil Drain Hose 30
- Oil Dipstick 30
- Pressure Sensing Devices 30
- Relocating Engine Parts 30

Remote Oil Filter 31
- Installation 31

Ventilation 32

Water Heater Connections 33
- Installation 33

Transmission 34
- Transmission 34
- Shipment 34
- Fluid 34
- Control Cables - ZF 34
- Borg Warner Velvet Drive 35
- PRM Newage 80/100 36

Installation - Final Check 38

Metric Conversion Chart 39

Wire Sizing Chart 40

INTRODUCTION

This marine Installation Manual covers all WESTERBEKE Engine and Generator models, both diesel and gasoline. The purpose of this manual is to provide boatyards and installers who are already familiar with installation procedures, additional detailed installation instructions to ensure the safest and most efficient operating conditions. These instructions may vary due to the many WESTERBEKE Engines and Generators available and the diversity of boat designs.

Proper location and installation of the engine or generator in the vessel are of prime importance. Factors in the installation that must be considered are:

1. **Ventilation,** to provide air for engine combustion and to remove heat produced by the engine/generator while operating.
2. **Exhaust System**, to properly discharge cooling water, quiet the exhaust, and expel exhaust gas. Install a siphon-break.
3. **Cooling Water Supply,** to cool the engine with a continuous flow of filtered raw water.
4. **Fuel System,** to provide an unrestricted fuel supply and properly filtered fuel to the fuel pump.
5. **Electrical Connections,** both AC and DC and proper grounding.
6. **Transmission Propeller Connections** (Engines only)

Please read this manual carefully and observe the safety precautions. Should your engine or generator require servicing, contact your WESTERBEKE dealer. For Serial Number location, Decal information or Parts Ordering information, refer to your WESTERBEKE Operators Manual.

INSTALLATION CODES AND SAFETY STANDARDS

Recommended publications concerning Safety Codes and standards are listed in this safety section. Following is a summary of what these standards include. Both the *U.S. Code* (USC), which are the laws passed by Congress, and the *Code of Federal Regulations* (CFR), which are agency-generated rules, contain pertinent information.

Title 46 Chapter 43 of the USC applies specifically to recreational vessels. It gives the Secretary of Transportation the authority to set the standards for boats that are manufactured and operated in the United States. It also spells out the penalties for violation of the standards.

According to *Title 46 USC 4307*, a person may not manufacture, construct, assemble, offer for sale, introduce into interstate commerce, or import into the United States any recreational vessel that does not comply with the federal regulations. Any associated equipment or component used on one of these vessels must also be in compliance. Further, a person is prohibited from operating any vessel that does not comply with the regulations.

Within the CFRs are the detailed requirements applicable to boats with gasoline engines. The majority of requirements pertinent to recreational vessels are contained in *33 CFR Part 183.*

- *Subpart I—Electrical Systems 183.401–183.460*
- *Subpart J—Fuel Systems 183.501–183.572*
- *Subpart K—Ventilation 183.601–183.630*

Standards for marine carburetors and the requirements for the backfire flame arrester are contained in *46 CFR Subparts 25.35 and 58.10*. Also within *Subpart 58.10* are the exhaust manifold and exhaust system requirements for both gasoline and diesel engine installations. Several publications that address these federal mandates, making compliance easier, include:

- The USCG *Fuel System, Electrical System and Ventilation Compliance Guidelines*
- The USCG *Safety Standards for Backyard Boat Builders*
- The National Fire Prevention Association *NFPA–302 Fire Protection Standard for Pleasure and Commercial Motor Craft*
- The ABYC *Standards and Recommended Practices for Small Craft*

The ABYC Standards Manual is the most comprehensive and widely used reference. ABYC constantly revises and updates its "projects," as it calls each topic section. The manual is easy to read and quite detailed. Adherence with these standards will put the recreational boater in compliance with federal mandates. Anyone considering installing an engine or generator should start with a thorough review of these standards:

- *H-2-Ventilation of Boats Using Gasoline*
- *H-32-Ventilation of Boats Using Diesel*
- *H-24-Gasoline Fuel Systems*
- *H-33-Diesel Fuel Systems*
- *P-1-Installation of Exhaust Systems for Propulsion and Auxiliary Engines*
- *P-4-Marine Inboard Engines and Transmissions*
- *E-11-AC and DC Electrical Systems for Boats*

USCG "inspected vessels," especially those carrying passengers for hire, are required to meet even more stringent standards than those discussed above. A very thorough review of the applicable CFRs is necessary before the Coast Guard arrives for their inspection.

Recommended Reading

For added information on installing Marine Engines and Generators, WESTERBEKE recommends the following books:

- *Elements of Yacht Design – Skene*
- *Marine Engines – Calder*
- *The Propeller Handbook – Gerr*

INTRODUCTION

PRODUCT SOFTWARE

Product software, (tech data, parts lists, manuals, brochures and catalogs) provided from sources other than WESTERBEKE are not within WESTERBEKE's control.

WESTERBEKE CANNOT BE RESPONSIBLE FOR THE CONTENT OF SUCH SOFTWARE, MAKES NO WARRANTIES OR REPRESENTATIONS WITH RESPECT THERETO, INCLUDING ACCURACY, TIMELINESS OR COMPLETENESS THEREOF, AND WILL IN NO EVENT BE LIABLE FOR ANY TYPE OF DAMAGE OR INJURY INCURRED IN CONNECTION WITH OR ARISING OUT OF THE FURNISHING OR USE OF SUCH SOFTWARE.

WESTERBEKE customers should also keep in mind the time span between printings of WESTERBEKE product software and the unavoidable existence of earlier WESTERBEKE manuals. In summation, product software provided with WESTERBEKE products, whether from WESTERBEKE or other suppliers, must not and cannot be relied upon exclusively as the definitive authority on the respective product. It not only makes good sense but is imperative that appropriate representatives of WESTERBEKE or the supplier in question be consulted to determine the accuracy and currentness of the product software being consulted by the customer.

NOTES, CAUTIONS AND WARNINGS

As this manual takes you through the installation procedures for your engine/generator, critical information will be highlighted by NOTES, CAUTIONS, and WARNINGS. An explanation follows:

NOTE: *An operating procedure essential to note.*

> ⚠ **CAUTION:** ***Procedures which, if not strictly observed, can result in the damage or destruction of your engine.***

> ⚠ **WARNING:** ***Procedures which, if not properly followed, can result in personal injury or loss of life.***

INSPECTION OF SHIPMENT

The engine/generator is shipped from the factory securely mounted and properly crated. Accessory equipment is shipped in a separate small box, usually packed within the engine's crate.

Before accepting shipment of the engine from the transportation company, the crate should be opened and the contents inspected for damage. If there is either visible or concealed damages, you should require the delivery agent to write "Received in damaged condition" on the delivery receipt. Also compare the contents of the shipment against the packing list and make sure that any discrepancies are properly noted. This is your protection against loss or damage. Claims concerning loss or damage must be made to the *carrier*, not to WESTERBEKE Corporation.

NOTE: *For safety reasons, the engine is NOT filled with lubricating oil for shipment. Before leaving the factory, however, each engine/generator is thoroughly tested with oil in its engine. This testing, among other things, provides all internal parts with a coating of oil. This oil acts as a preservative, providing reliable protection against corrosion for at least one year if the engine/generator is properly stored.*

NOTE: *A carbon monoxide warning decal has been provided by WESTERBEKE. Affix this decal in a visible position in the vessel's living quarters.*

ENGINE LOCATION AND MOUNTING

ENGINE LOCATION

The overall layout of the engine room should be planned for easy inspection, servicing, and handling of the engine. Thoroughly study all the equipment to be installed and make a paper plan to provide optimum engine room space. Consider the following:

1. **Ventilation –** Since an increase in engine room temperature causes a reduction in the intake air and thus a drop in engine output, ventilation inside the engine room must be ample. See your Operators Manual for the ventilation requirements for your engine/generator.
   - **a.** Dimension and capacity with a ventilator installed
   - **b.** Dimension and capacity with an intake duct installed
2. **Engine Room Height –** For engines having a top oil fill, the distance from the oil cap at the top of the rocker cover to the overhead must be enough that oil can easily be added.
3. **Space to move the propeller shaft flange –** Allow approximately 3 - 4 in (7.7 - 10.0 cm) of space to move the flange toward the stern for changing the transmission, etc.
4. **Exhaust System –** Make sure there is adequate space for all exhaust system components, including the exhaust silencer.

   Refer to EXHAUST SYSTEM INSTALLATION in this manual.

ENGINE BED

A strong mounting bed contributes to the satisfactory alignment and operating of the engine. The bed must be rigidly constructed, and neither deflect nor twist when it is subjected to the engine's weight or to the pressures that the boat may experience while operating in rough seas. The bed must be strong enough to keep the engine's alignment within one or two thousands of an inch at all times. The bed has to withstand the forward push of the propeller shaft. It is also critical that the beds are parallel to one another and to the line of the propeller shaft when viewed from above. They also must be offset an equal distance from the line of the propeller shaft.

In fiberglass hulls, we recommend that solid wooden support stringers similar to those in wooden hulls be formed and fitted, then glassed securely to the hull. This will allow the hanger bolts to be installed firmly in the wood, thereby reducing noise and transmitted vibration.

The stringers must be as wide or wider than the engine mounting isolator. Avoid excessive height. Isolator overhang and/or rounded stringer surfaces are detrimental to the flexible mounts' ability to retain vibration.

Supports between the bed stringers and supports extending at right angles from the stringers to the hull may be required for proper strength and to aid in the absorption of vibrations.

The engine bed must be constructed so that a wrench can be set at the engine base to retighten the engine mounting bolts at the mounting feet.

Many boat manufacturers are now providing preformed fiberglass mounting beds for their engine installations. These beds, when used, should be of sufficient thickness for proper support and should be well-glassed to the hull when installed.

Avoid the temptation to install the engine on a pair of angle irons glassed in place. Such a construction will allow vibration to pass through to the hull. Flexible engine mounts require a firm foundation.

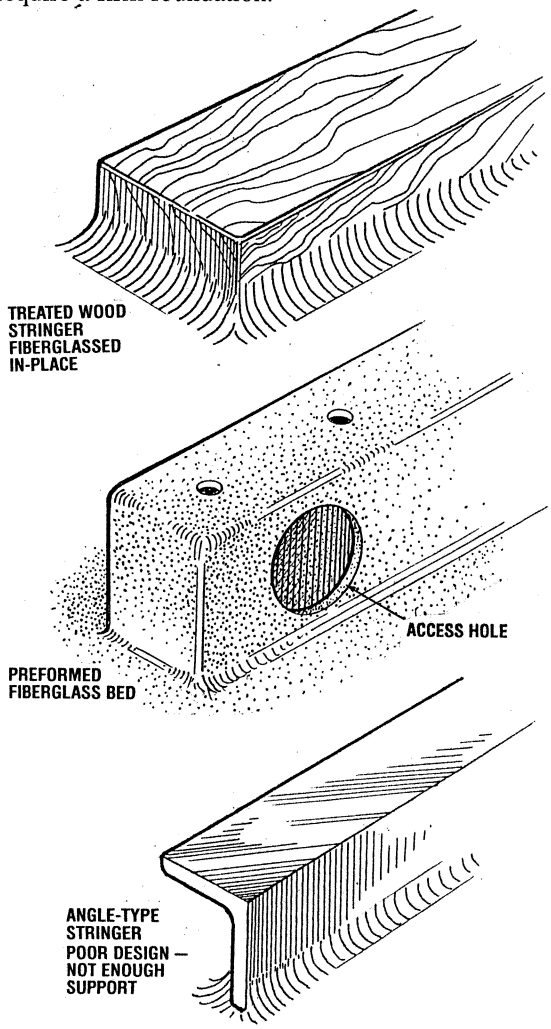

ENGINE BEDS

When preparing the engine load, also plan out and build an engine drip pan. To simplify cleaning up after oil changes, consider a separate drip pan for use under the oil and fuel filters.

SSB RADIO/ELECTRONIC GROUNDING

If your boat needs a ground plane for a radio and other electronic gear, this is the ideal time to bond a substantial area of copper mesh into the base of the engine space while it is accessible.